CELEGON
SMART OPENING SYSTEMS

COMPACK 90°
LIVING

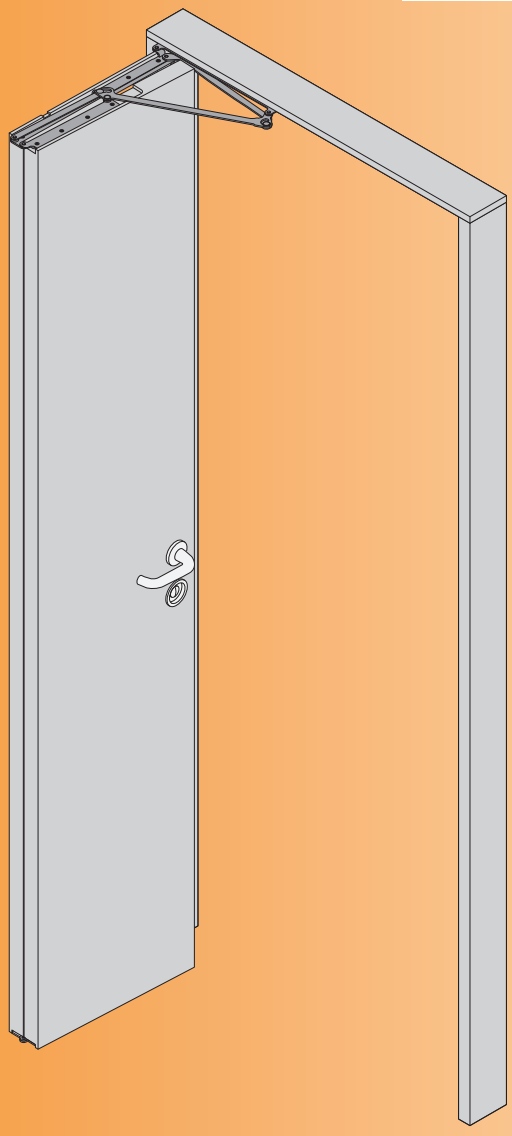

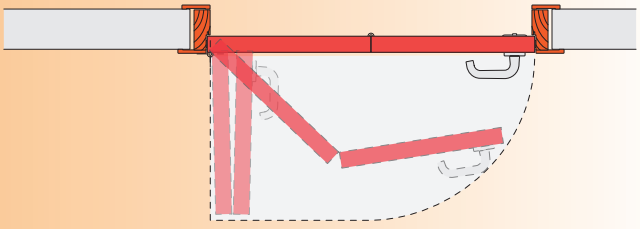

TECHNICAL CONSTRUCTION MANUAL
COMPACK LIVING 90° system

CELEGON S.r.l. - Via G. Galilei, 6 - 30035 Mirano (Venezia) - T +39 (0)41 5728404 - F +39 (0)41 5728522
www.celegon.it - info@celegon.it

MTCL90EN - Rev. 06-06/2025

CONTENTS

1. INTRODUCTION 3
2. COMPATIBILITY OF THE COMPACK LIVING SYSTEM 4
3. VARIANTS OF USE 5
3.1 Hardware 6
3.2 Upper crossbeam machining 7
3.3 Vertical section without rabbet profile 8
3.4 Vertical section with rabbet profile 9
3.5 Horizontal section left door 10
3.6 Dimensional diagram of the door - symmetric leaves 11
3.7 Dimensional diagram of the door - asymmetric leaves 12
4. DIMENSIONAL SUMMARIES 14
4.1 Single opening door 14
4.2 Dimensional diagram of the double opening door 15
4.3 COMPACK LIVING 180° - 90° combination possibilities on double doors 16
4.4 Double opening door 17
5. COMPONENTS 18
5.1 Wood components without rabbet profile compatible with COMPACK LIVING 180° 18
5.2 Wood components with rabbet profile compatible with COMPACK LIVING 180° 19
5.3 Door leaf hinge side (compatible with COMPACK LIVING 180°) 20
5.4 Door leaf handle side (compatible with COMPACK LIVING 180°) 21
5.5 Workings for accessories (compatible with COMPACK LIVING 180°) 22
5.6 Door hardware mounting hole diagrams (compatible with COMPACK LIVING 180°) 23
5.7 Hinge side door jamb (compatible with COMPACK LIVING 180°) 24
5.8 Handle side door jamb (compatible with COMPACK LIVING 180°) 25
5.9 Upper crossbeam without rabbet profile (compatible with COMPACK LIVING 180°) 26
5.10 Working for the silicone gasket (compatible with COMPACK LIVING 180°) 27
5.11 Working for the silicone gasket (compatible with COMPACK LIVING 180°) 28
6. ASSEMBLY 29
6.1 Assembling the hardware on the leaf 29
6.2 Assembling the hardware on the jamb 30
6.3 Installation door leaf on the jambs 31
7. SPECIAL COMPACK LIVING MAGNETIC LATCH 32
7.1 Examples for using the special COMPACK LIVING lock 33

The company reserved the right to make, at any time, without prior notice, all technical changes it considers appropriate to improve the quality and the correct functionality of the products.

All contents of this manual are covered by copyright.
It's forbidden even partial reproduction of text and drawings, without prior written permission of Celegon s.r.l.. Any abuse will be prosecuted according to law.

All right reserved - Duplication or divulgation without autorization is strictly forbidden.

1. INTRODUCTION

The **COMPACK LIVING 90°** system is part of the new generation hardware for folding hinged doors that do not use a track or hanger, similar to the tried and proven **COMPACK LIVING 180°** hardware (flush opening folding doors). The two **COMPACK LIVING** systems both use panels and doorframes that are identical in terms of dimensions and design.

The 90° opening is obtained by using an innovative hinge that allows the door leaf to: move silently, use a traditional lever handle, close against stops on three sides. These functional characteristics represent a clear innovation with respect to traditional systems. The **COMPACK LIVING 90°** hinge can be used for closet doors or other furnishing applications.

The **COMPACK LIVING** systems are designed for extreme simplicity and speed of installation.

With **COMPACK LIVING** systems, **any dimension in width and height can be managed. The combined weight limit** for the two leaves is 50 kg.

COMPACK LIVING 90° uses the special **COMPACK** magnetic latch with a lever handle on one side and a recessed handle on the other. With the **COMPACK** latch the recessed handle can be used to operate the latch. This system provides 180° rotation (*see Section 7. SPECIAL COMPACK MAGNETIC LATCH*).

The **COMPACK LIVING** systems provide stable, silent and ergonomic door operation. Stop on three sides ensures excellent acoustic insulation when the door is closed.
These systems leave maximum technical and aesthetic freedom in designing the door. Doors can be constructed in various versions to respond to the countless customer needs and to fit oversized dimensions.

COMPACK LIVING systems consist of steel plates connected one to another with steel pins and plastic bushings.

The door leaves are prepared in the same way for 90° or 180° opening. The same stock of semi-finished materials (doors leaves) and same preparatory work (milling, drilling) allow installation either of the COMPACK LIVING 90° hinge for a door opening to 90° or the COMPACK LIVING 180° hinge for a door opening to 180°.

The hardware is cleaned using a soft cloth being careful not to move the door during the cleaning process to prevent injury.
Never put your hands in among the moving arms when installing or operating the door.

Give the information sheets including in the package to the final user.

MEASUREMENT CALCULATOR

INSTALLATION VIDEO

2. COMPATIBILITY OF THE COMPACK LIVING SYSTEM

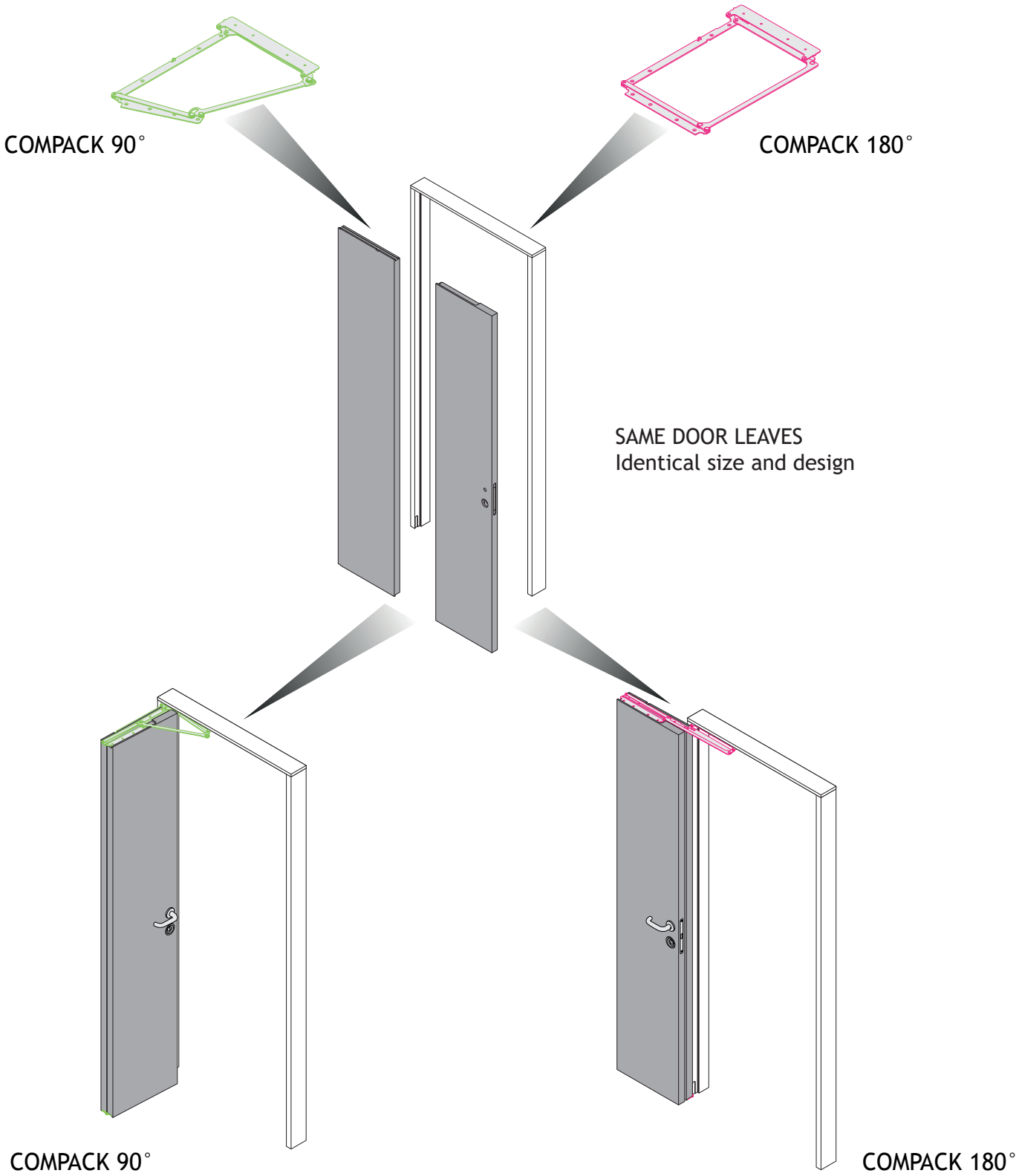

3. VARIANTS OF USE

To get the most out of the variants illustrated on this page, see the specifications for using the COMPACK latch (*see Section 7. SPECIAL COMPACK LIVING MAGNETIC LATCH*).

- **Version 1**
  With symmetric door leaves

By using the handle only on one side and the recessed handle on the other, is necessary to apply the magnetic lock **COMPACK**.
Version possible with all available items RIGHT/LEFT.

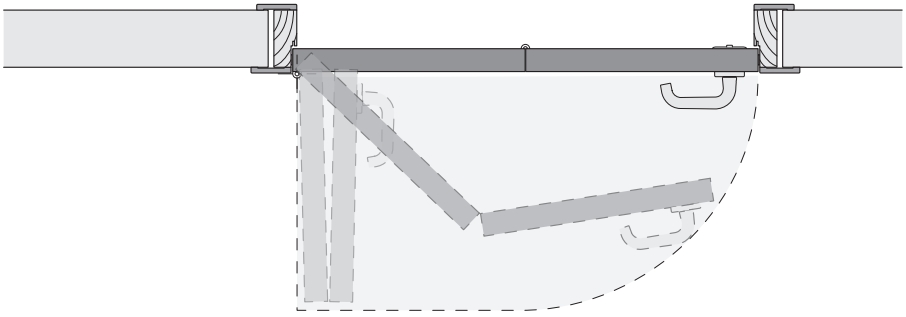

- **Version 2**
  With asymmetric door leaves with handle leaf from -100 to 0 lower

By using the handle only on one side and the recessed handle on the other, is necessary to apply the magnetic lock **COMPACK**.
Version possible with all available items RIGHT/LEFT.

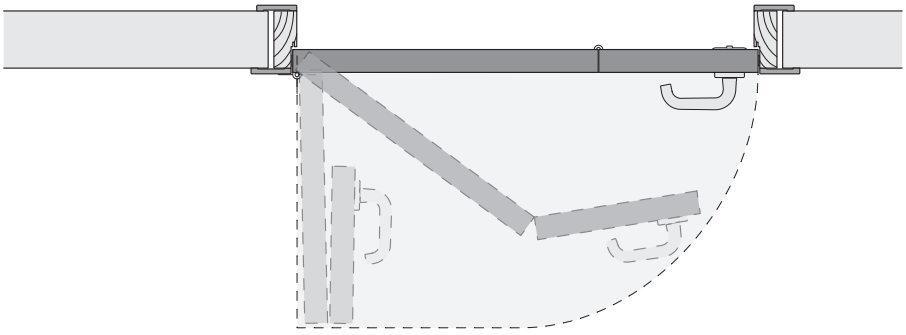

WAY OF OPENING

1 - Left opening

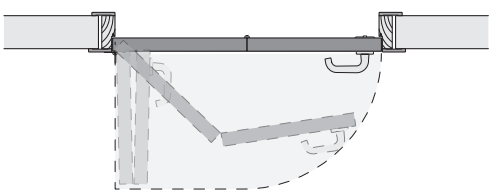

2 - Right opening

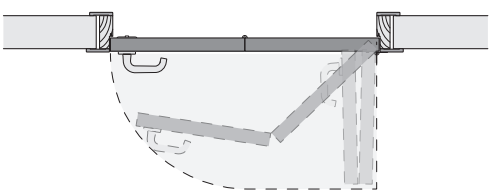

3.1 Hardware

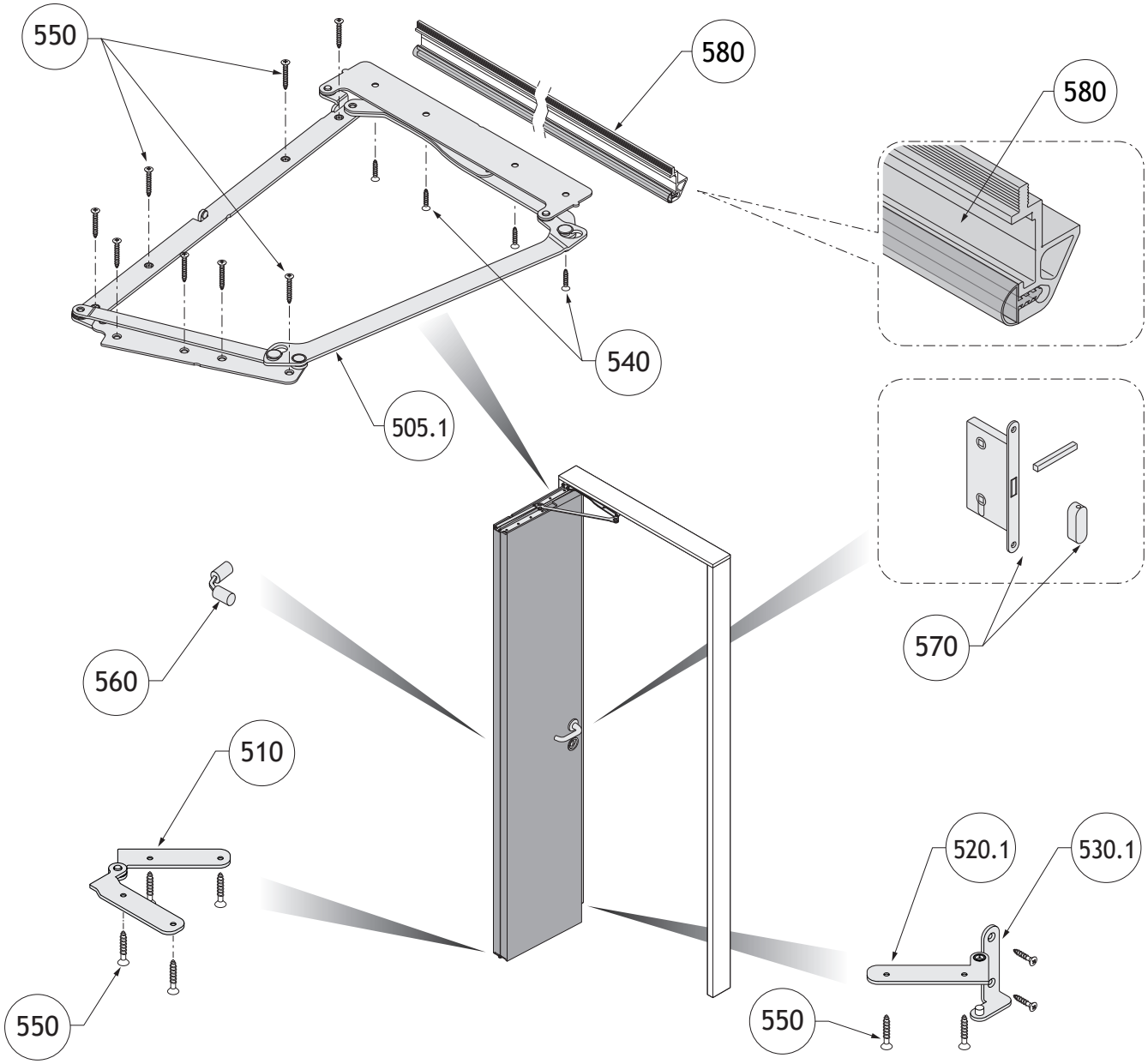

Part list		
Ref.	**Q.ty**	**Description**
505.1	1	Compack Living 90 system RH or LH
510	1	Central hinge lower
520.1	1	Lateral hinge lower for leaf RH or LH
530.1	1	Lateral hinge lower for jamb RH or LH
540	4	Screw TSP trx ø 4x22
550	16	Screw TSP trx ø 4x30
560	1	Invisible hinge for alignment leaves
570	1	Magnetic lock Compack Living with strikers and special square spindle (optional)
580	1	Rabbet profile (optional) (gasket NOT supplied)

3.2 Upper crossbeam machining

Machining without rabbet profile
(see paragraph 5.9)

Machining for rabbet profile
(see paragraph 5.10)

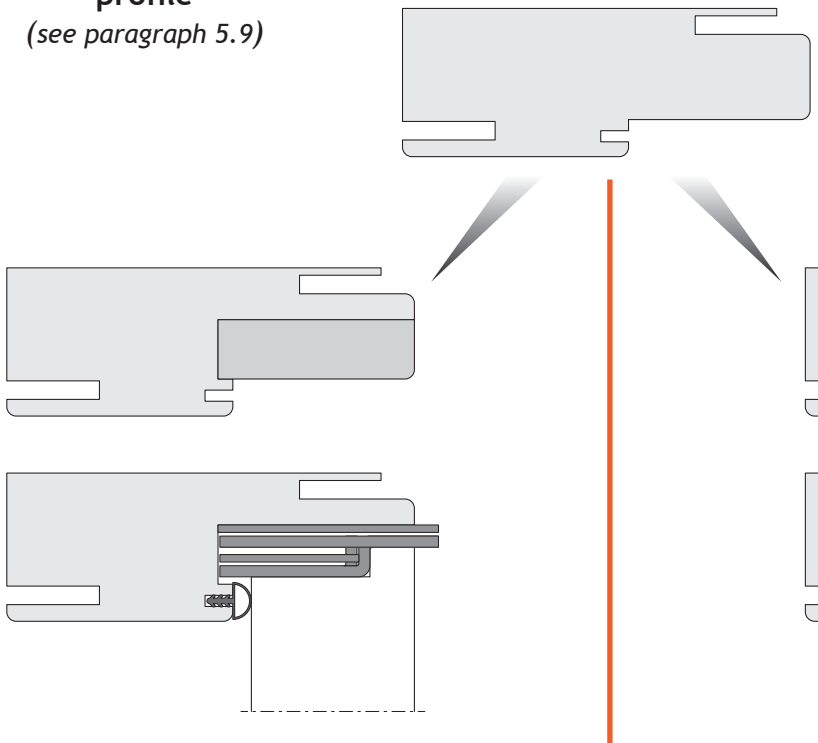

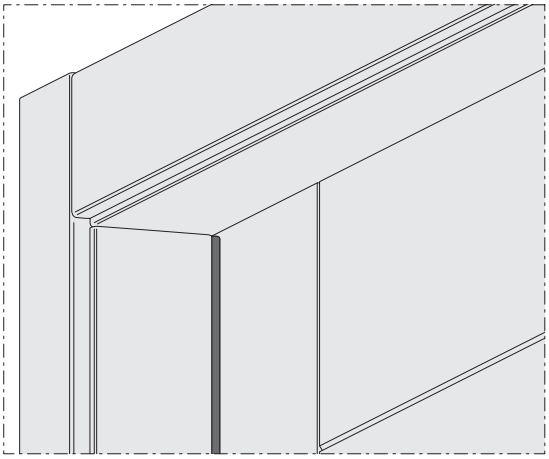

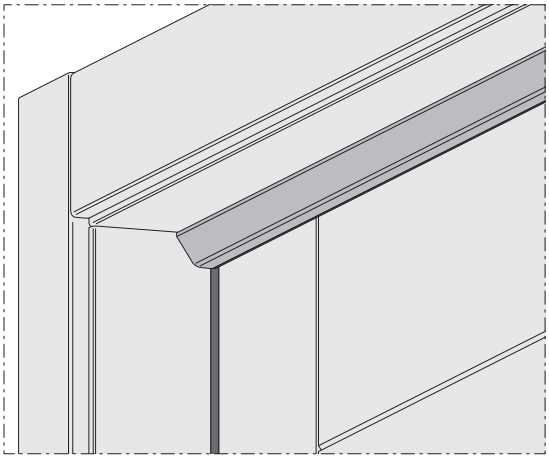

PROS	CONS
- With the door open you can hardly see the machining	- Invasive machining
- With the door closed, you can't see anything. Like in a swing door	- The finish on visible machined parts must be restored
	- The remaining part where the top plate is attached is a bit thin
	- For the same frame size, the panel is higher than a swing door

PROS	CONS
- Minimally invasive machining	- With the door open you can see the profile
- With the application of the profile, the machined parts are covered	- With the door closed you can see the profile
- With the same frame size, the panel is as high as a swing door	

3.3 Vertical section without rabbet profile

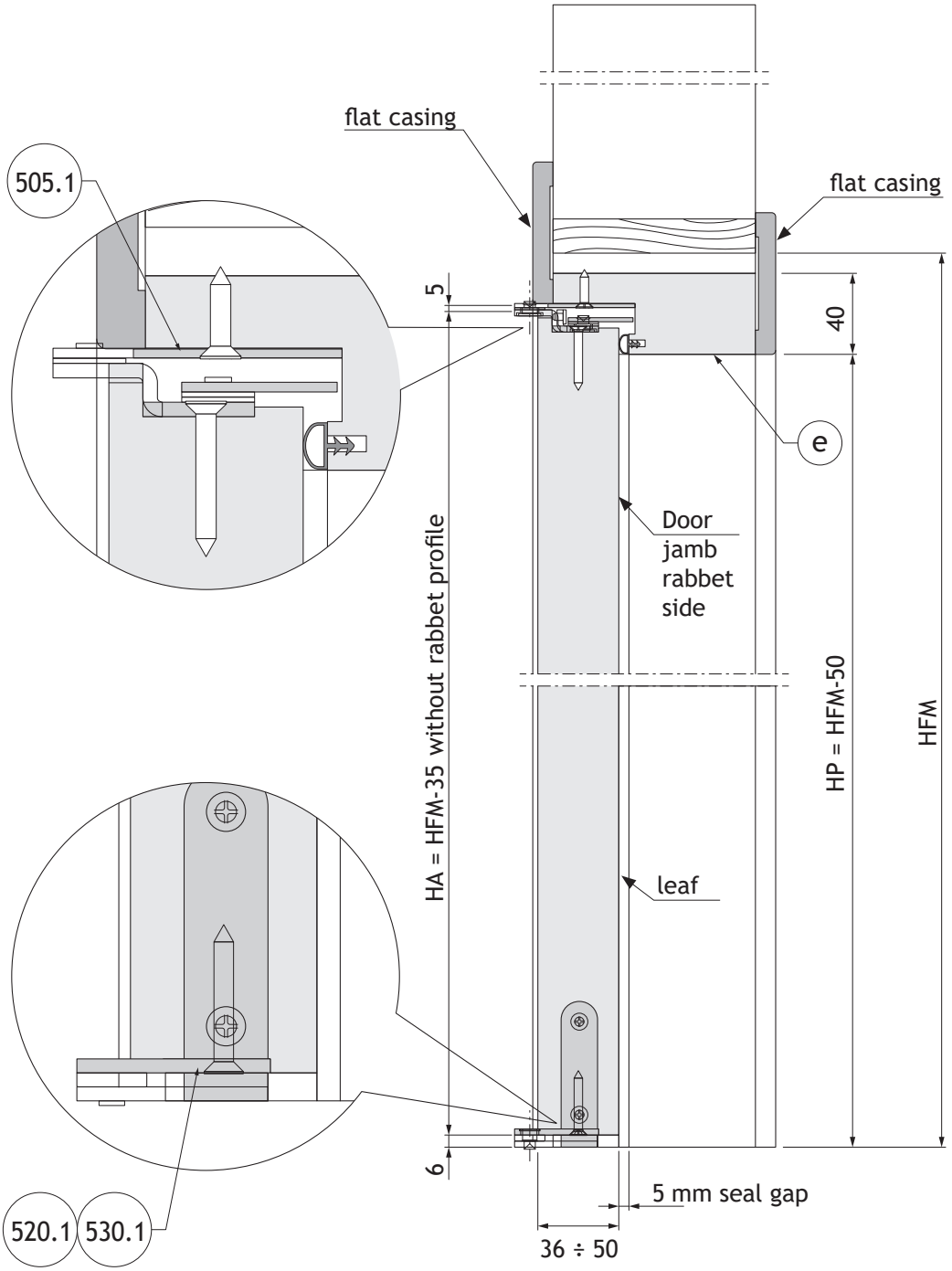

HFM = Wall Hole Height
HP = Passage Dimension
HA = Leaf Height

Part list		
Ref.	**Q.ty**	**Description**
505.1	1	Compack Living system 90 RH or LH
520.1	1	Lateral hinge lower for leaf RH or LH
530.1	1	Lateral hinge lower for jamb RH or LH
e	1	Upper crossbeam

3.4 Vertical section with rabbet profile

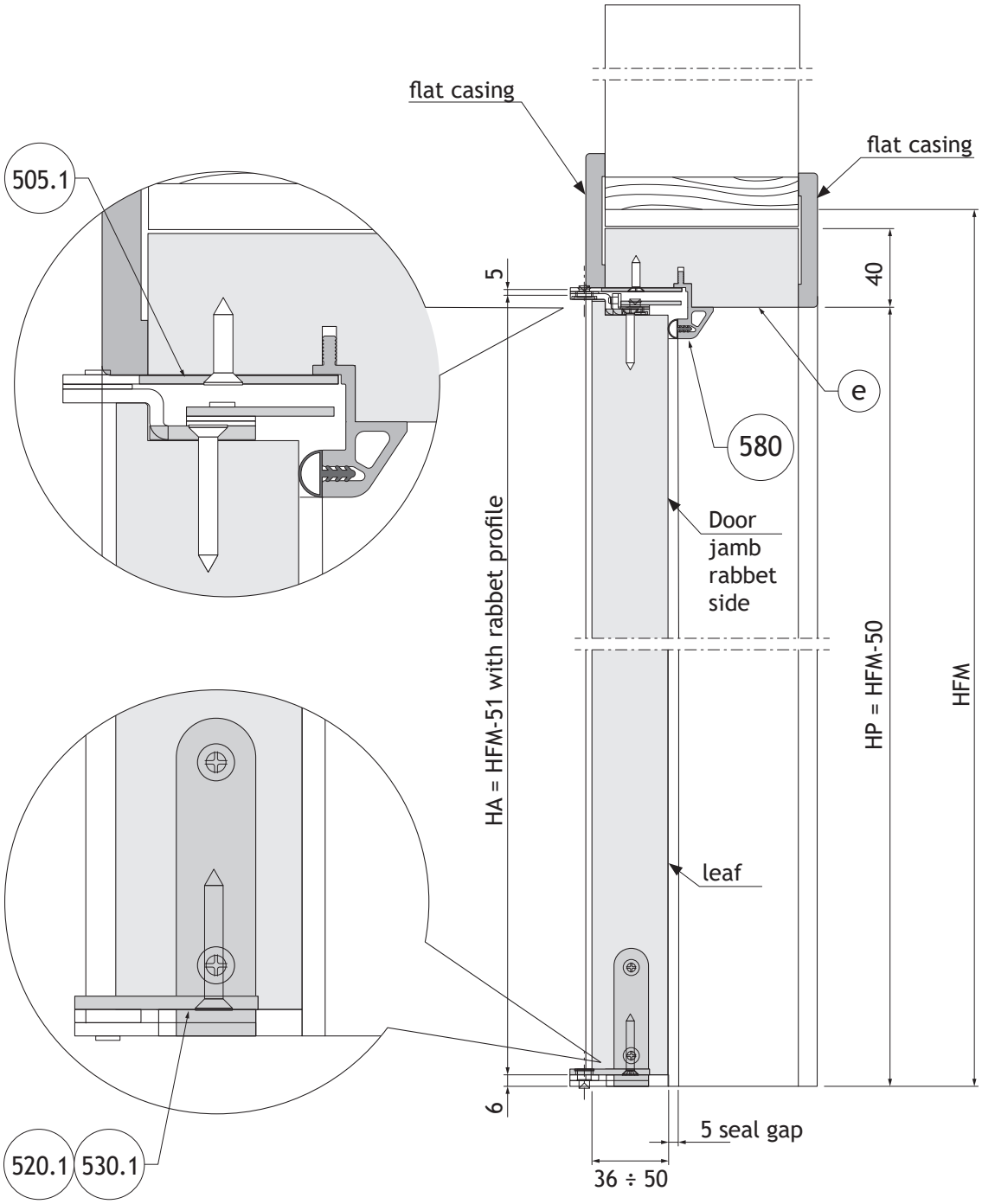

HFM = Wall Hole Height
HP = Passage Dimension
HA = Leaf Height

Part list		
Ref.	**Q.ty**	**Description**
505.1	1	Compack Living 90 system RH or LH
520.1	1	Lateral hinge lower for leaf RH or LH
530.1	1	Lateral hinge lower for jamb RH or LH
580	1	Rabbet profile (optional)
e	1	Upper crossbeam

3.5 Horizontal section left door

Example of Left Door *(Right door is symmetric)*

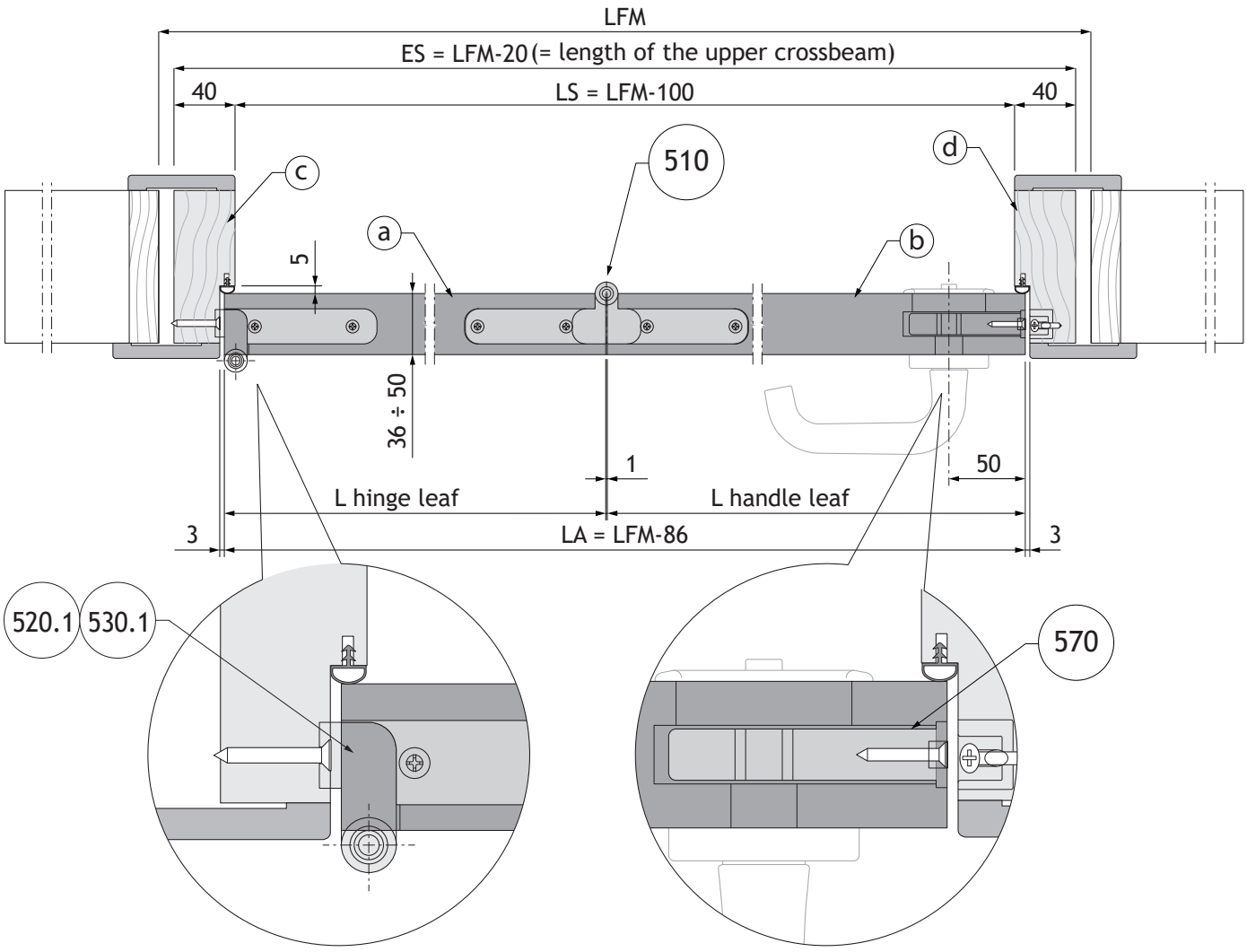

LFM = Wall Hole Width
ES = Outer Jamb
LS = Door Jamb Opening
LA = Leaf Width

Part list		
Ref.	**Q.ty**	**Description**
510	1	Central hinge lower
520.1	1	Lateral hinge lower for leaf RH or LH
530.1	1	Lateral hinge lower for jamb RH or LH
570	1	Magnetic lock Compack Living with strikers and special square spindle
a	1	Hinge leaf
b	1	Handle leaf
c	1	Hinge side door jamb
d	1	Handle side door jamb

3.6 Dimensional diagram of the door - symmetric leaves

Version 1 - symmetric leaves							
LFM	LP	L** hinge leaf	L** handle leaf	Z	V	art. **COMPACK**	
						BLACK finish	INOX finish
700	502	306,5	306,5	347	15	905F60DX 905F60SX	925F60DX 925F60SX
800	602	356,5	356,5	397	0	905F70DX 905F70SX	925F70DX 925F70SX
900	702	406,5	406,5	447	20	905A80DX 905A80SX	925A80DX 925A80SX
1000	802	456,5	456,5	497	110	905B90DX 905B90SX	925B90DX 925B90SX
1100	902	506,5	506,5	547	80	905B100DX 905B100SX	925B100DX 925B100SX

LFM = Wall Hole Width
LP = Passage Dimension
Z = Encumbrance in opening
V = Maximum lateral space requirement when opening door

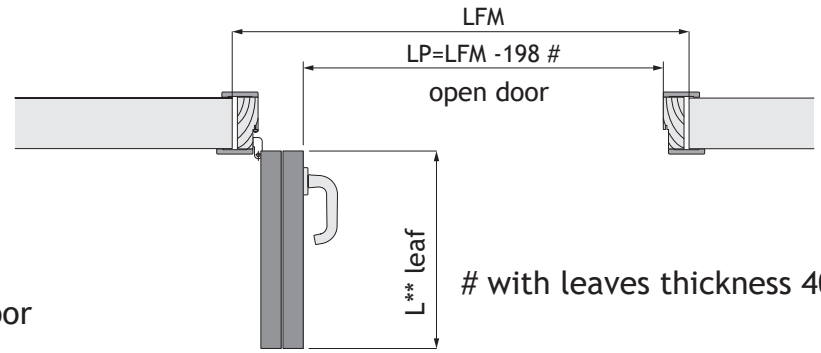

with leaves thickness 40

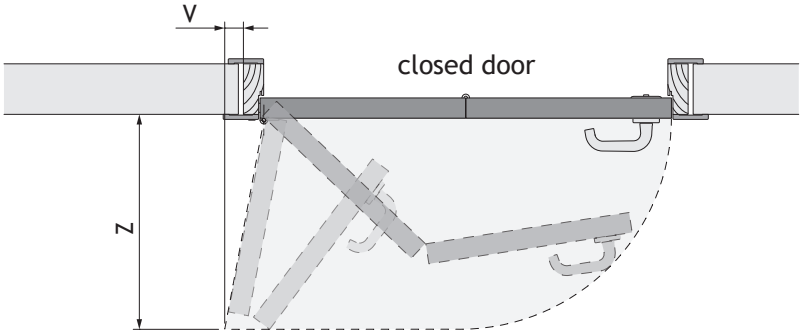

Example of Left Door
(Right door is symmetric)

Upper hardware seat diagram *(see chapter 4. DIMENSIONAL SUMMARIES)*

Version 1 - symmetric leaves					
art. **COMPACK**		L** hinge leaf	dimension X	L** handle leaf	dimension Y
BLACK finish	INOX finish				
905F60DX 905F60SX	925F60DX 925F60SX	306,5	208	306,5	234
905F70DX 905F70SX	925F70DX 925F70SX	356,5	208	356,5	234
905A80DX 905A80SX	925A80DX 925A80SX	406,5	258	406,5	284
905B90DX 905B90SX	925B90DX 925B90SX	456,5	358	456,5	384
905B100DX 905B100SX	925B100DX 925B100SX	506,5	358	506,5	384

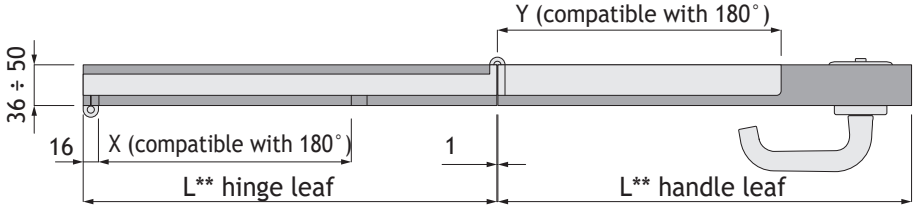

(**) Hinge leaf and handle leaf widths are calculated with a reciprocal distance of 1 mm.

3.7 Dimensional diagram of the door - asymmetric leaves

Handle leaf from -100 to 0 lower

Version 2 - asymmetric leaves (handle leaf from -100 to 0 lower)							
LFM	LP	L** hinge leaf	L** handle leaf	Z	V	art. **COMPACK**	
						BLACK finish	INOX finish
600 ÷ 700	402 ÷ 502	306,5	206,5 ÷ 306,5	347	15	905F60DX 905F60SX	925F60DX 925F60SX
700 ÷ 800	502 ÷ 602	356,5	256,5 ÷ 356,5	397	0	905F70DX 905F70SX	925F70DX 925F70SX
800 ÷ 900	602 ÷ 702	406,5	306,5 ÷ 406,5	447	20	905A80DX 905A80SX	925A80DX 925A80SX
900 ÷ 1000	702 ÷ 802	456,5	356,5 ÷ 456,5	497	110	905B90DX 905B90SX	925B90DX 925B90SX
1000 ÷ 1100	802 ÷ 902	506,5	406,5 ÷ 506,5	547	80	905B100DX 905B100SX	925B100DX 925B100SX

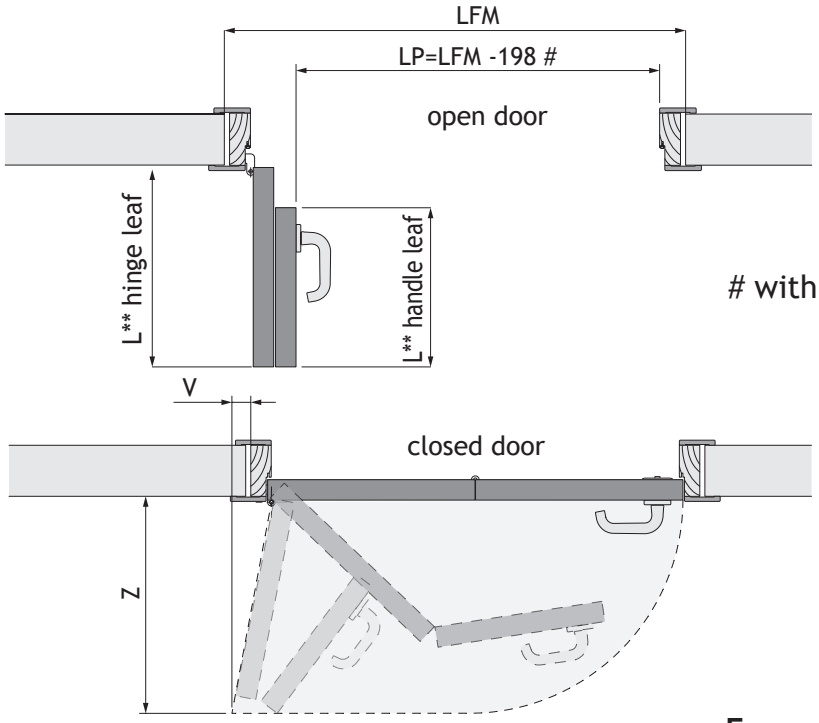

with leaves thickness 40

Example of Left Door
(Right door is symmetric)

LFM = Wall Hole Width
LP = Passage Dimension
Z = Encumbrance in opening
V = Maximum lateral space requirement when opening door

Upper hardware seat diagram *(see chapter 4. DIMENSIONAL SUMMARIES)*

Version 2 - asymmetric leaves (handle leaf from -100 to 0 lower)					
art. **COMPACK**		L** hinge leaf	dimension X	L** handle leaf	dimension Y
BLACK finish	INOX finish				
905F60DX 905F60SX	925F60DX 925F60SX	306,5	208	(1) 206,5 ÷ 306,5	(2) 234
(*) **WARNING:** if the handle leaf (1) is less than 240 mm wide, Y (2) must also be reduced **(A)**					
905F70DX 905F70SX	925F70DX 925F70SX	356,5	208	256,5 ÷ 356,5	234
905A80DX 905A80SX	925A80DX 925A80SX	406,5	258	306,5 ÷ 406,5	284
905B90DX 905B90SX	925B90DX 925B90SX	456,5	358	(1) 356,5 ÷ 456,5	(2) 384
(*) **WARNING:** if the handle leaf (1) is less than 390 mm wide, Y (2) must also be reduced **(B)**					
905B100DX 905B100SX	925B100DX 925B100SX	506,5	358	406,5 ÷ 506,5	384

(*) **(A)** and **(B)**: Cases of incompatibility with **COMPACK LIVING** 180°.

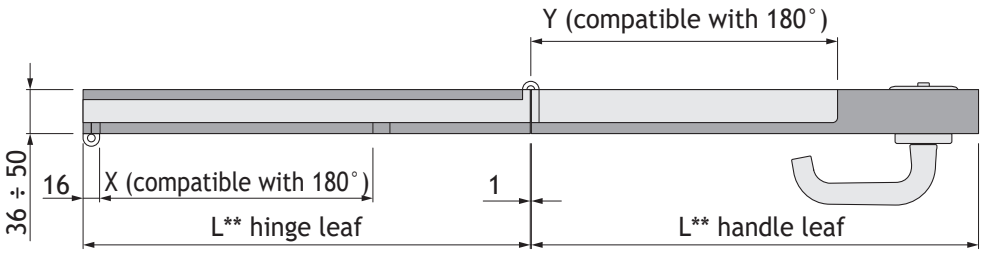

(A): if the handle leaf(1) is less than 240 mm wide, Y(2) must also be reduced.

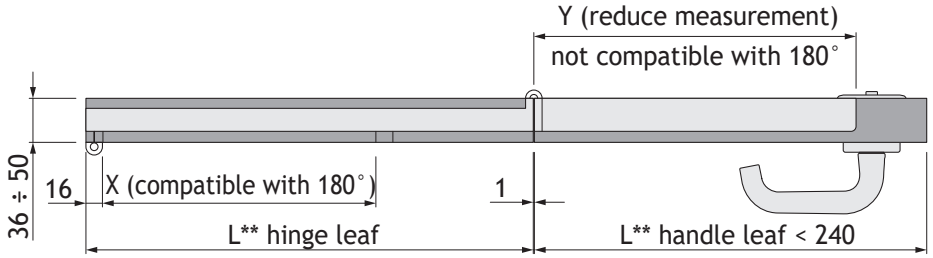

(B): if the handle leaf(1) is less than 390 mm wide, Y(2) must also be reduced.

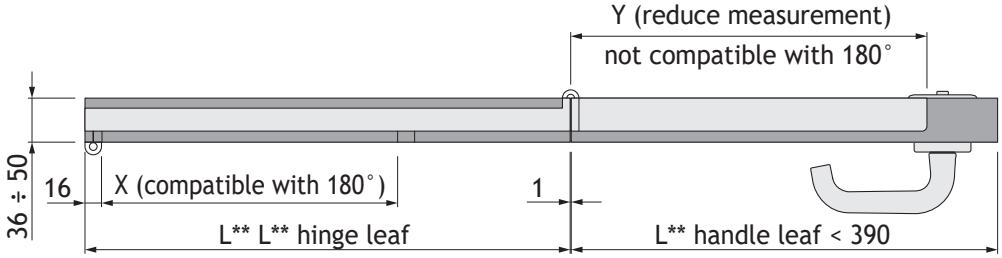

(**) Hinge leaf and handle leaf widths are calculated with a reciprocal distance of 1 mm.

4. DIMENSIONAL SUMMARIES

4.1 Single opening door

The following form is a summary all of possible realizable dimensions with the measurements.
The **COMPACK LIVING 90°** system foresee a minimum wall opening **(LFM)** of 700 mm with symmetric leaves and of 650 mm with asymmetric leaves.
The maximum wall opening **(LFM)** with symmetric and asymmetric leaves is 1100 mm.
For intermediate measurements the handle leaf (version with asymmetrical door leaves) can be shortened.

Summary dimensions for single opening door with symmetric leaves

Wall Hole Width **LFM**	Handle Leaf Difference	Passage Dimension **LP**	Fix Dimension L** hinge leaf	Working dimension x	Fix Dimension L** handle leaf	Working dimension y	Encumbrance in opening **Z**	Encumbrance movement **V**	art. **COMPACK**	
									BLACK finish	INOX finish
700	symmetric 0	502	306,5	208	306,5	234	347	15	905F60DX 905F60SX	925F60DX 925F60SX
800	symmetric 0	602	356,5	208	356,5	234	397	0	905F70DX 905F70SX	925F70DX 925F70SX
900	symmetric 0	702	406,5	258	406,5	284	447	20	905A80DX 905A80SX	925A80DX 925A80SX
1000	symmetric 0	802	456,5	358	456,5	384	497	110	905B90DX 905B90SX	925B90DX 925B90SX
1100	symmetric 0	905	506,5	358	506,5	384	547	80	905B100DX 905B100SX	925B100DX 925B100SX

Summary dimensions for single opening door with asymmetric leaves

Wall Hole Width **LFM**	Handle Leaf Difference	Passage Dimension **LP**	Fix Dimension L** hinge leaf	Working dimension x	Variable Dimension L** handle leaf	Working dimension y	Encumbrance in opening **Z**	Encumbrance movement **V**	art. **COMPACK**	
									BLACK finish	INOX finish
600÷700	asymmetric from -100 to 0	402÷502	306,5	208	(1) 206,5÷306,5	(2) 234	347	15	905F60DX 905F60SX	925F60DX 925F60SX
(*) **WARNING:** if the handle leaf (1) is less than 240 mm wide, Y (2) must also be reduced										
700÷800	asymmetric from -100 to 0	502÷602	356,5	208	256,6÷356,5	234	397	0	905F70DX 905F70SX	925F70DX 925F70SX
800÷900	asymmetric from -100 to 0	602÷702	406,5	258	306,5÷406,5	284	447	20	905A80DX 905A80SX	925A80DX 925A80SX
900÷1000	asymmetric from -100 to 0	702÷802	456,5	358	(1) 356,5÷456,5	(2) 384	497	110	905B90DX 905B90SX	925B90DX 925B90SX
(*) **WARNING:** if the handle leaf (1) is less than 390 mm wide, Y (2) must also be reduced										
1000÷1100	asymmetric from -100 to 0	802÷905	506,5	358	406,5÷506,5	384	547	80	905B100DX 905B100SX	925B100DX 925B100SX

(*) Cases of incompatibility with **COMPACK LIVING** 180°.

4.2 Dimensional diagram of the double opening door

Dimensional example

Attention: *you need to use two hardwares* **COMPACK LIVING**, *one right and one left.*

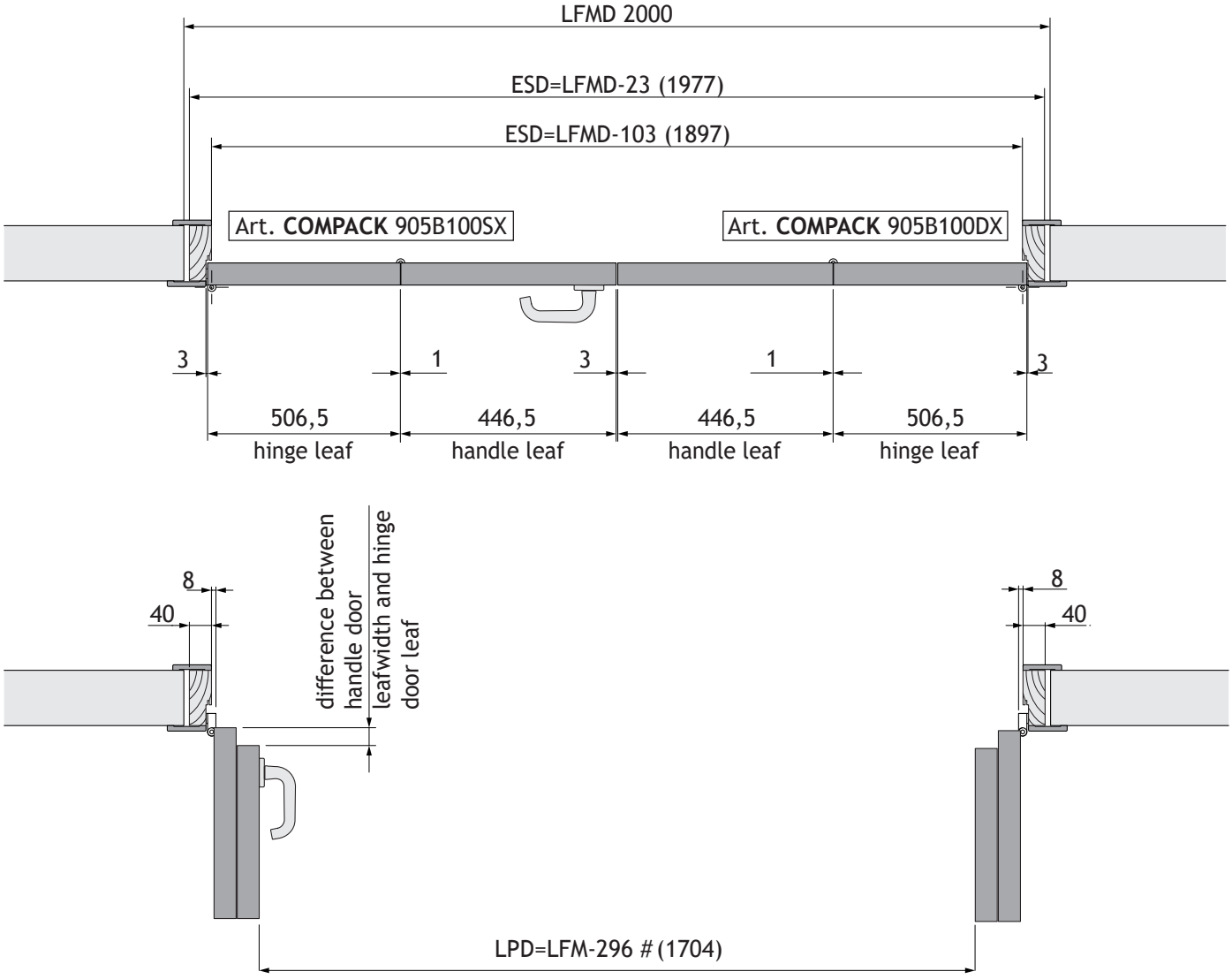

with leaves thickness 40

LFMD = Double Wall Opening Width
ESD = External Jamb Double (LFMD-23)
LSD = Light Jamb Double (LFMD-103)
LPD = Width Passagge Double Door Leaf (LFM -296 #)

4.3 COMPACK LIVING 180° - 90° combination possibilities on double doors

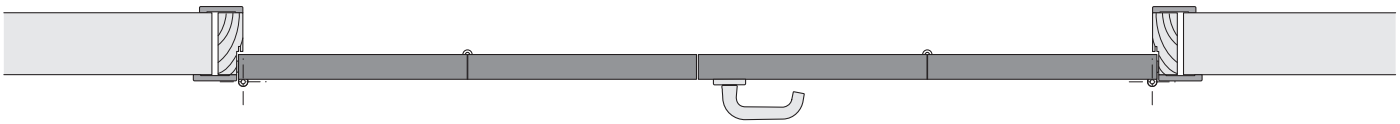

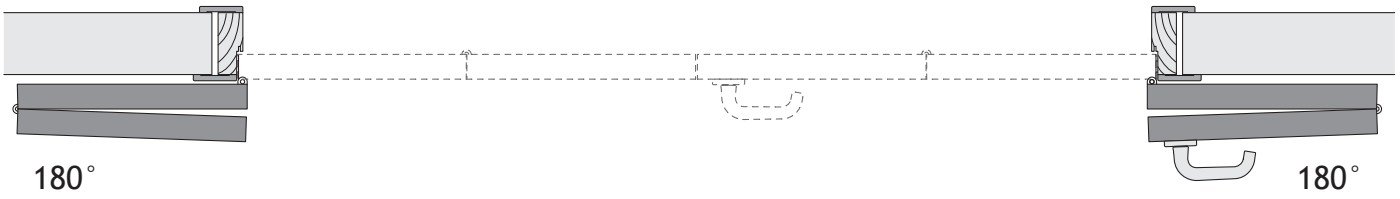

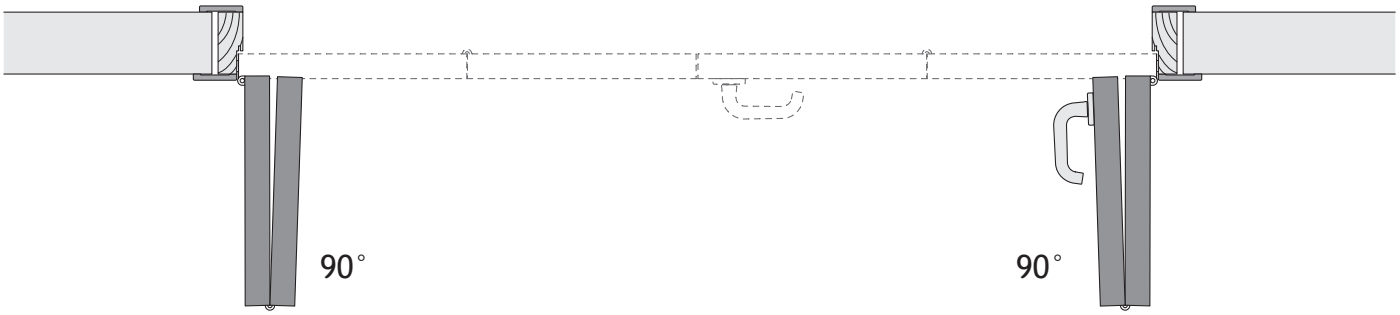

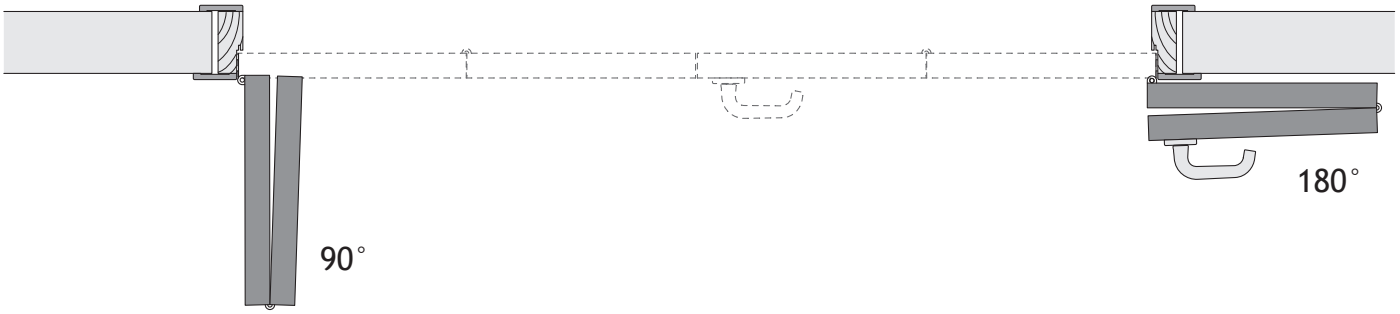

- Possible combinations using the same components in wood

4.4 Double opening door

The following form is a summary all of possible realizable dimensions with the measurements.
The **COMPACK LIVING 90°** system foresee a minimum wall opening **(LFM)** of 1320 mm with symmetric leaves and of 1120 mm with asymmetric leaves.
The maximum wall opening **(LFM)** with symmetric and asymmetric leaves is 2120 mm.
For intermediate measurements the handle leaf (version with asymmetrical door leaves) can be shortened.

Summary dimensions for double opening door with symmetric leaves

Wall Hole Width **LFM**	Handle Leaf Difference	Passage Dimension **LP**	Fix Dimension L** hinge leaf	Working dimension x	Fix Dimension L** handle leaf	Working dimension y	Encumbrance in opening **Z**	Encumbrance movement **V**	art. **COMPACK**	
									BLACK finish	INOX finish
1320	symmetric 0	1024	306,5	208	306,5	234	347	15	905F60DX 905F60SX	925F60DX 925F60SX
1520	symmetric 0	1224	356,5	208	356,5	234	397	0	905F70DX 905F70SX	925F70DX 925F70SX
1720	symmetric 0	1424	406,5	258	406,5	284	447	20	905A80DX 905A80SX	925A80DX 925A80SX
1920	symmetric 0	1624	456,5	358	456,5	384	497	110	905B90DX 905B90SX	925B90DX 925B90SX
2120	symmetric 0	1824	506,5	358	506,5	384	547	80	905B100DX 905B100SX	925B100DX 925B100SX

Summary dimensions for double opening door with asymmetric leaves

Wall Hole Width **LFM**	Handle Leaf Difference	Passage Dimension **LP**	Fix Dimension L** hinge leaf	Working dimension x	Variable Dimension L** handle leaf	Working dimension y	Encumbrance in opening **Z**	Encumbrance movement **V**	art. **COMPACK**	
									BLACK finish	INOX finish
1120÷1320	asymmetric from -100 to 0	864÷1024	306,5	208	(1) 206,5÷306,5	(2) 234	347	15	905F60DX 905F60SX	925F60DX 925F60SX
(*) **WARNING:** if the handle leaf (1) is less than 240 mm wide, Y (2) must also be reduced										
1320÷1520	asymmetric from -100 to 0	1064÷1224	356,5	208	256,6÷356,5	234	397	0	905F70DX 905F70SX	925F70DX 925F70SX
1520÷1720	asymmetric from -100 to 0	1264÷1424	406,5	258	306,5÷406,5	284	447	20	905A80DX 905A80SX	925A80DX 925A80SX
1720÷1920	asymmetric from -100 to 0	1464÷1624	456,5	358	(1) 356,5÷456,5	(2) 384	497	110	905B90DX 905B90SX	925B90DX 925B90SX
(*) **WARNING:** if the handle leaf (1) is less than 390 mm wide, Y (2) must also be reduced										
1920÷2120	asymmetric from -100 to 0	1664÷1824	506,5	358	406,5÷506,5	384	547	80	905B100DX 905B100SX	925B100DX 925B100SX

(*) Cases of incompatibility with **COMPACK LIVING** 180°.

5. COMPONENTS

5.1 Wood components without rabbet profile compatible with COMPACK LIVING 180°

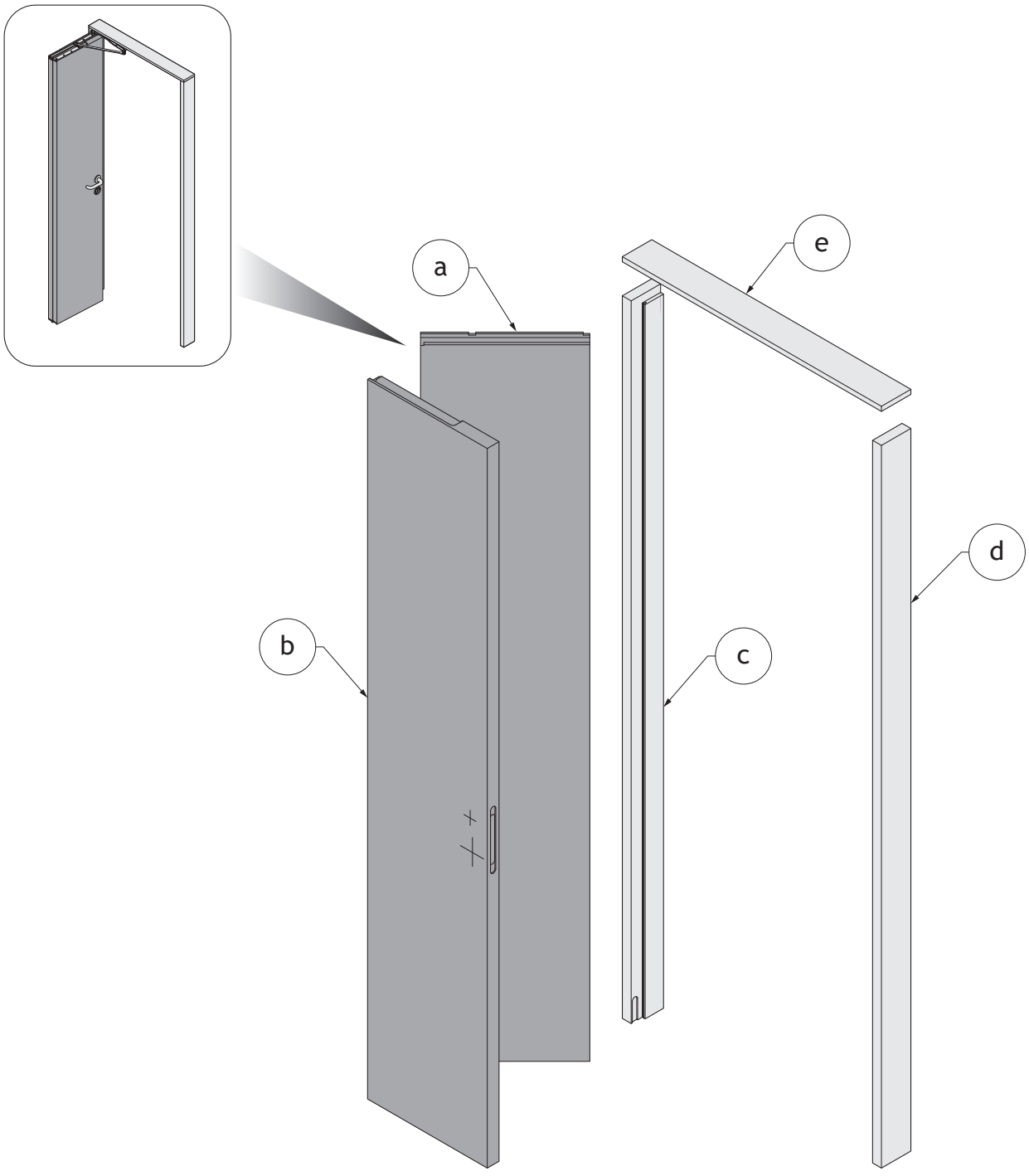

Part list		
Ref.	**Q.ty**	**Description**
a	1	Hinge leaf
b	1	Handle leaf
c	1	Hinge side door jamb
d	1	Handle side door jamb
e	1	Upper crossbeam

5.2 Wood components with rabbet profile compatible with COMPACK LIVING 180°

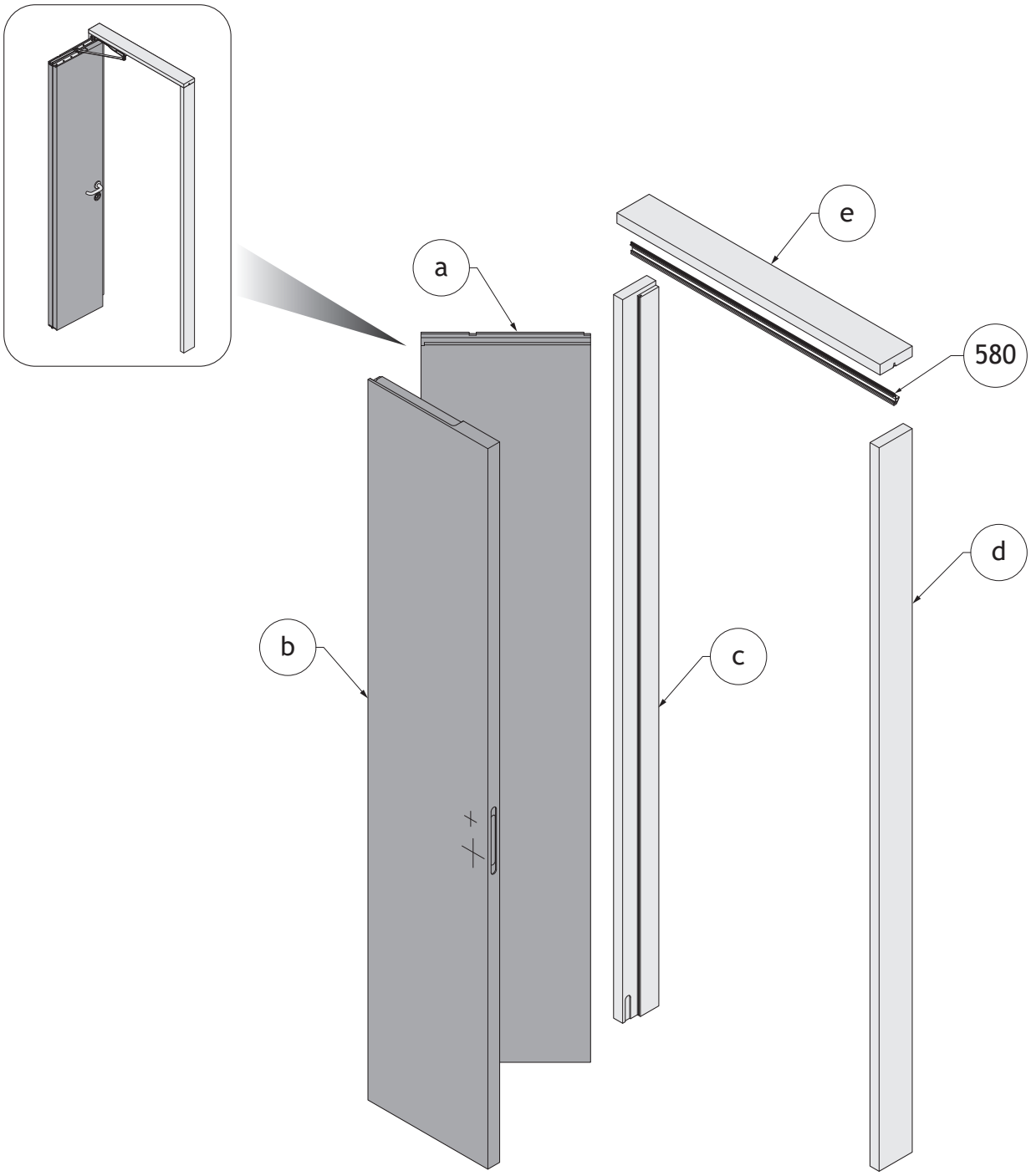

Part list		
Ref.	**Q.ty**	**Description**
580	1	Rabbet profile (optional)
a	1	Hinge leaf
b	1	Handle leaf
c	1	Hinge side door jamb
d	1	Handle side door jamb
e	1	Upper crossbeam

5.3 Door leaf hinge side (compatible with COMPACK LIVING 180°)

Left leaf door hinge side *(Right door is symmetric)*

(**) For dimensions see sections 3.6, 3.7

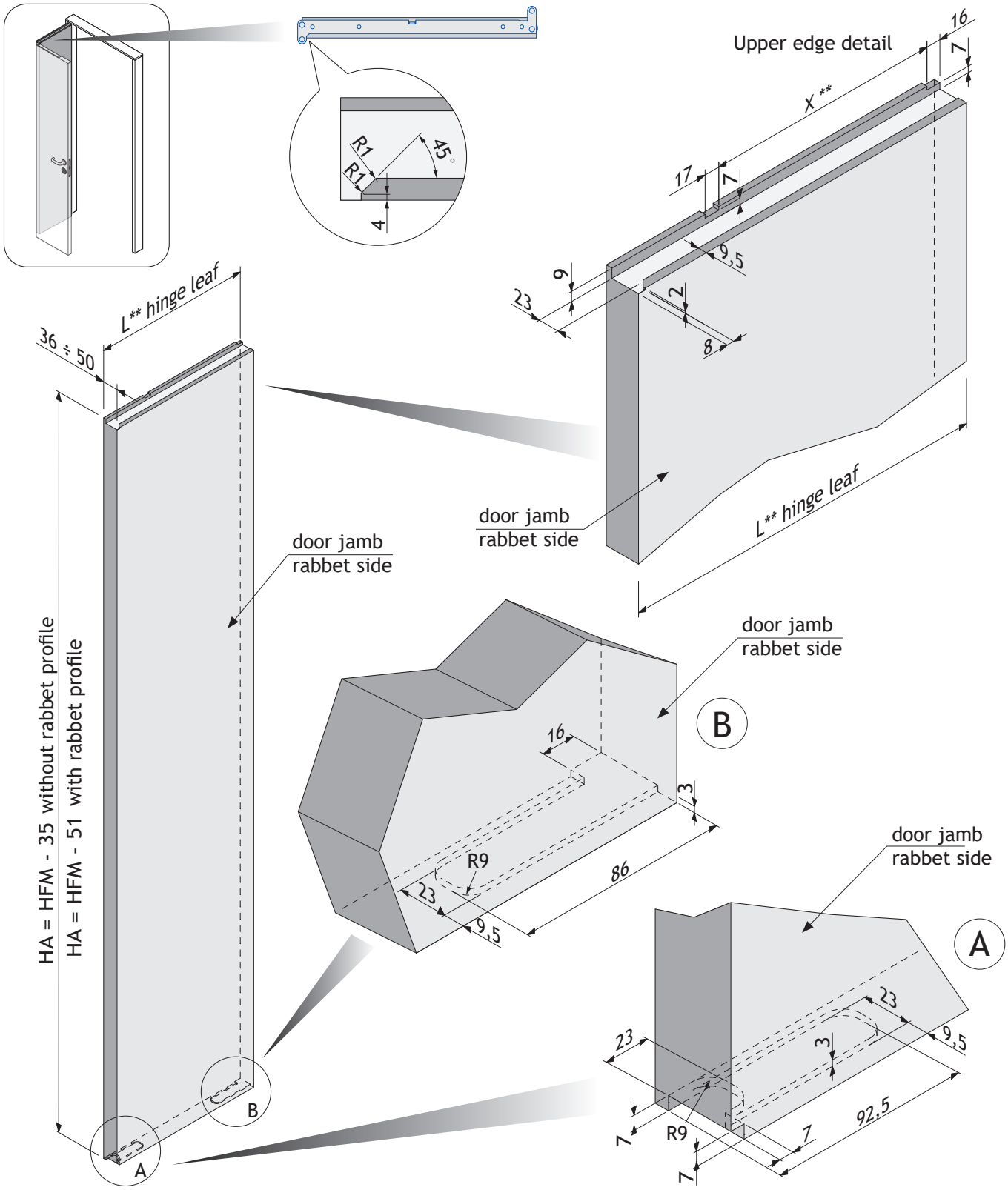

HFM = Wall Hole Height

HA = Leaf Height

5.4 Door leaf handle side (compatible with COMPACK LIVING 180°)

Left leaf door handle side *(Right door is symmetric)*

(**) For dimensions see sections 3.6, 3.7

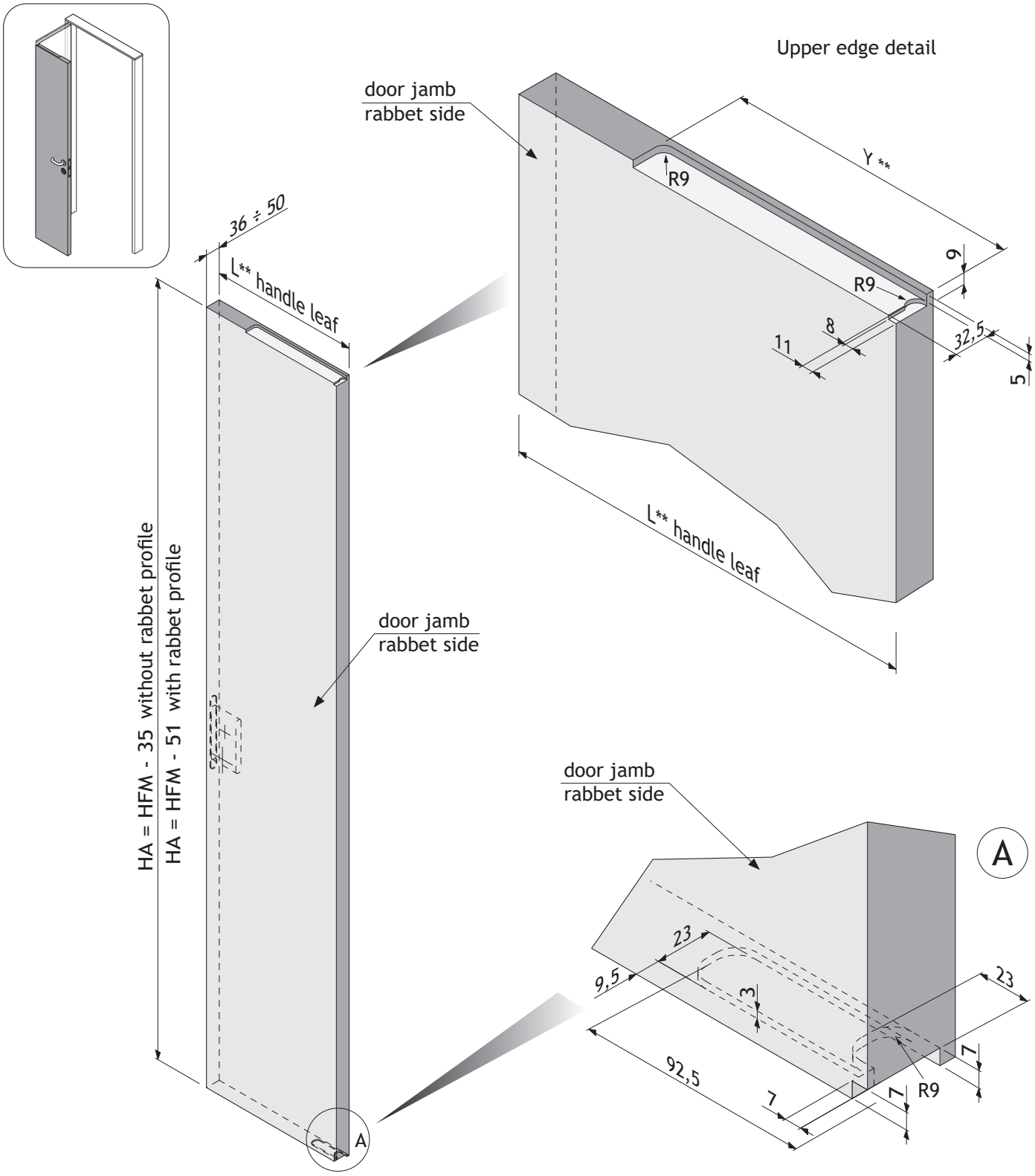

HFM = Wall Hole Height

HA = Leaf Height

5.5 Workings for accessories (compatible with COMPACK LIVING 180°)

The following work is necessary when installing the special **COMPACK LIVING** magnetic latch.

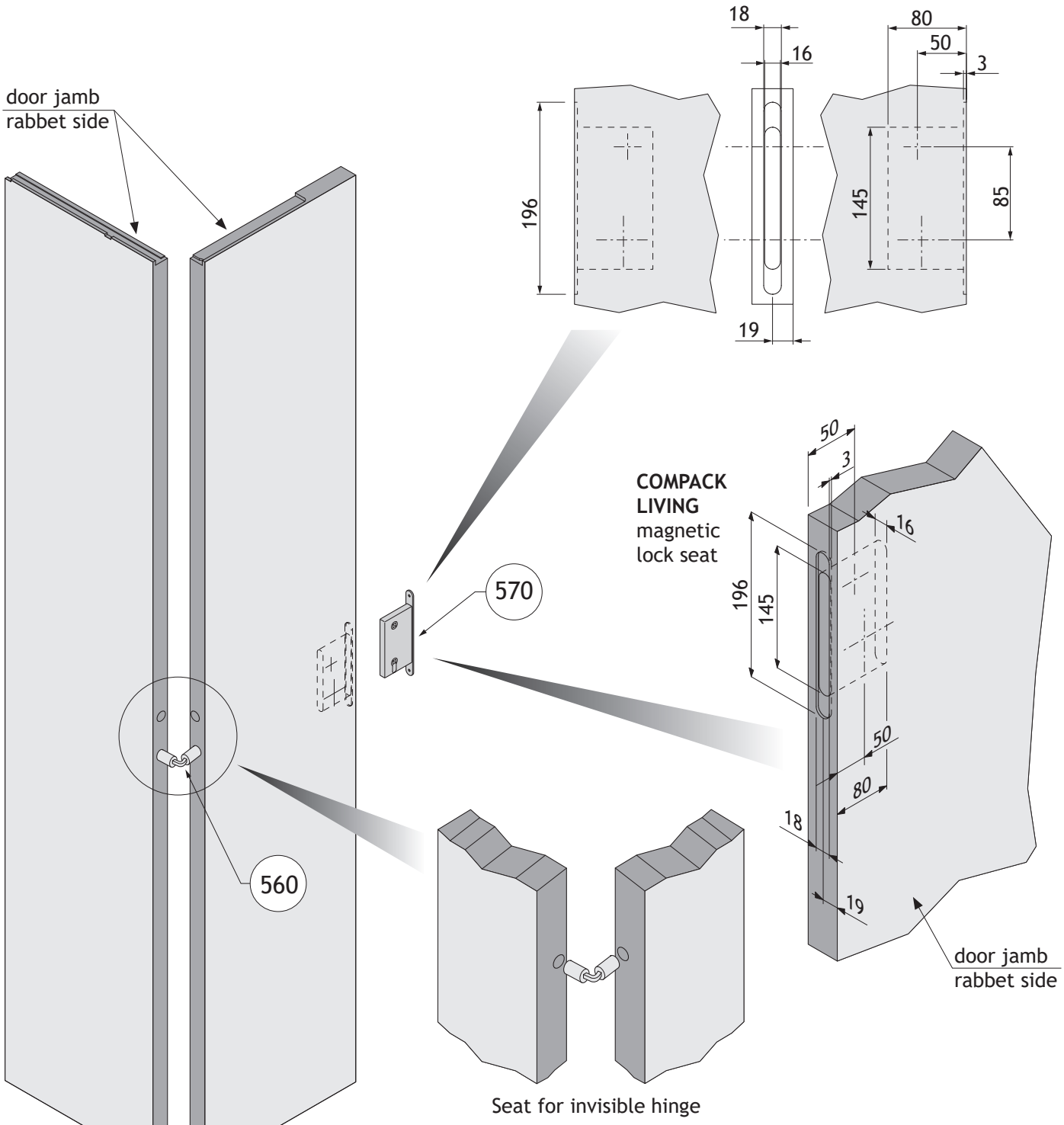

Part list		
Ref.	**Q.ty**	**Description**
560	1	Invisible hinge for alignment leaves
570	1	Magnetic lock Compack Living with strikers and special square spindle

5.6 Door hardware mounting hole diagrams (compatible with COMPACK LIVING 180°)

Door hardware mounting holes for both door systems: 90° and 180°

Hardware group F60

BLACK	INOX
805F60SX	825F60SX
805F60DX	825F60DX
905F60SX	925F60SX
905F60DX	925F60DX

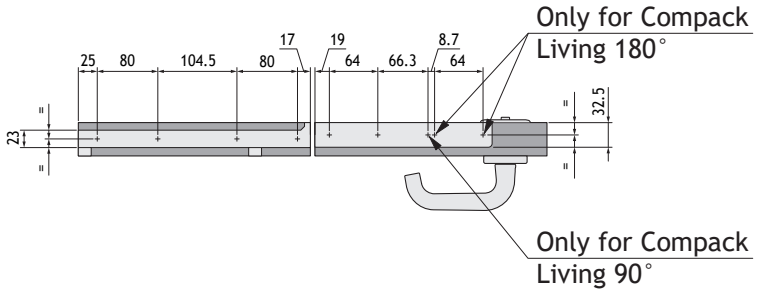

Hardware group F70

BLACK	INOX
805F70SX	825F70SX
805F70DX	825F70DX
905F70SX	925F70SX
905F70DX	925F70DX

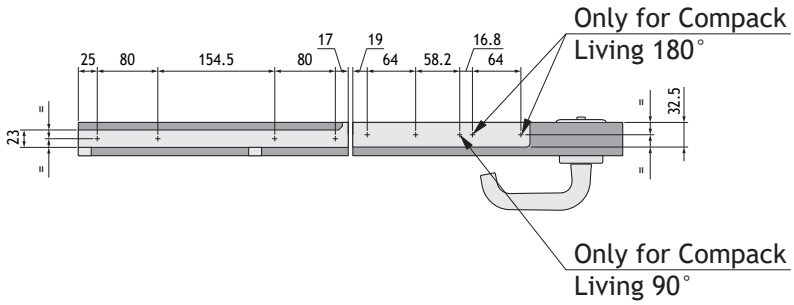

Hardware group A80

BLACK	INOX
805A80SX	825A80SX
805A80DX	825A80DX
905A80SX	925A80SX
905A80DX	925A80DX

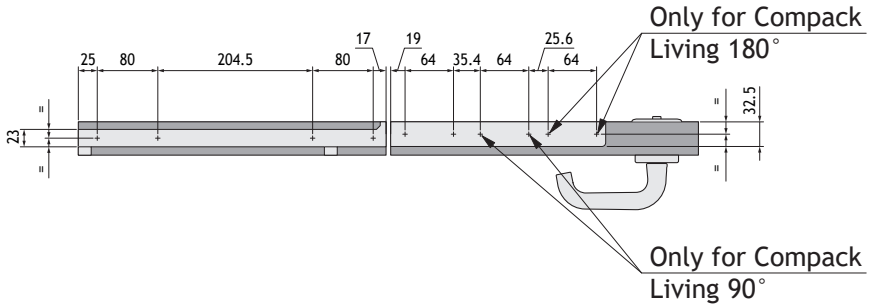

Hardware group B90

BLACK	INOX
805B90SX	825B90SX
805B90DX	825B90DX
905B90SX	925B90SX
905B90DX	925B90DX

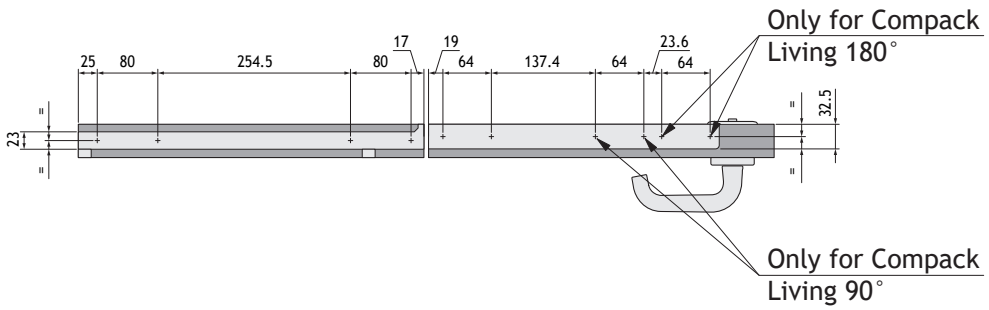

Hardware group B100

BLACK	INOX
805B100SX	825B100SX
805B100DX	825B100DX
905B100SX	925B100SX
905B100DX	925B100DX

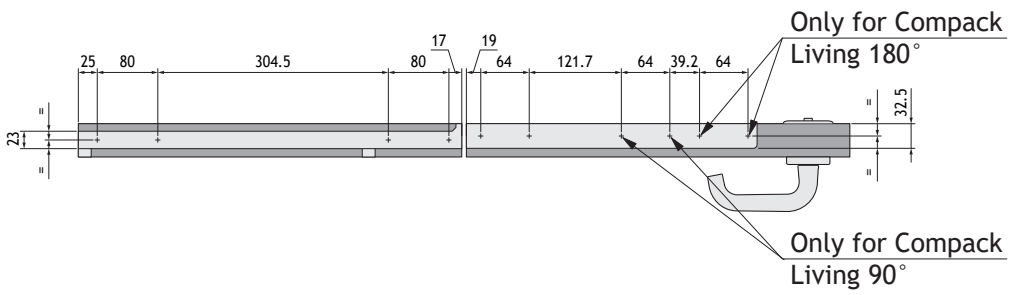

5.7 Hinge side door jamb (compatible with COMPACK LIVING 180°)

Door left jamb hinge side *(Right jamb is symmetric)*

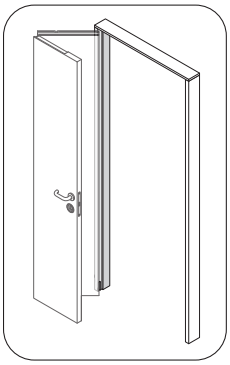

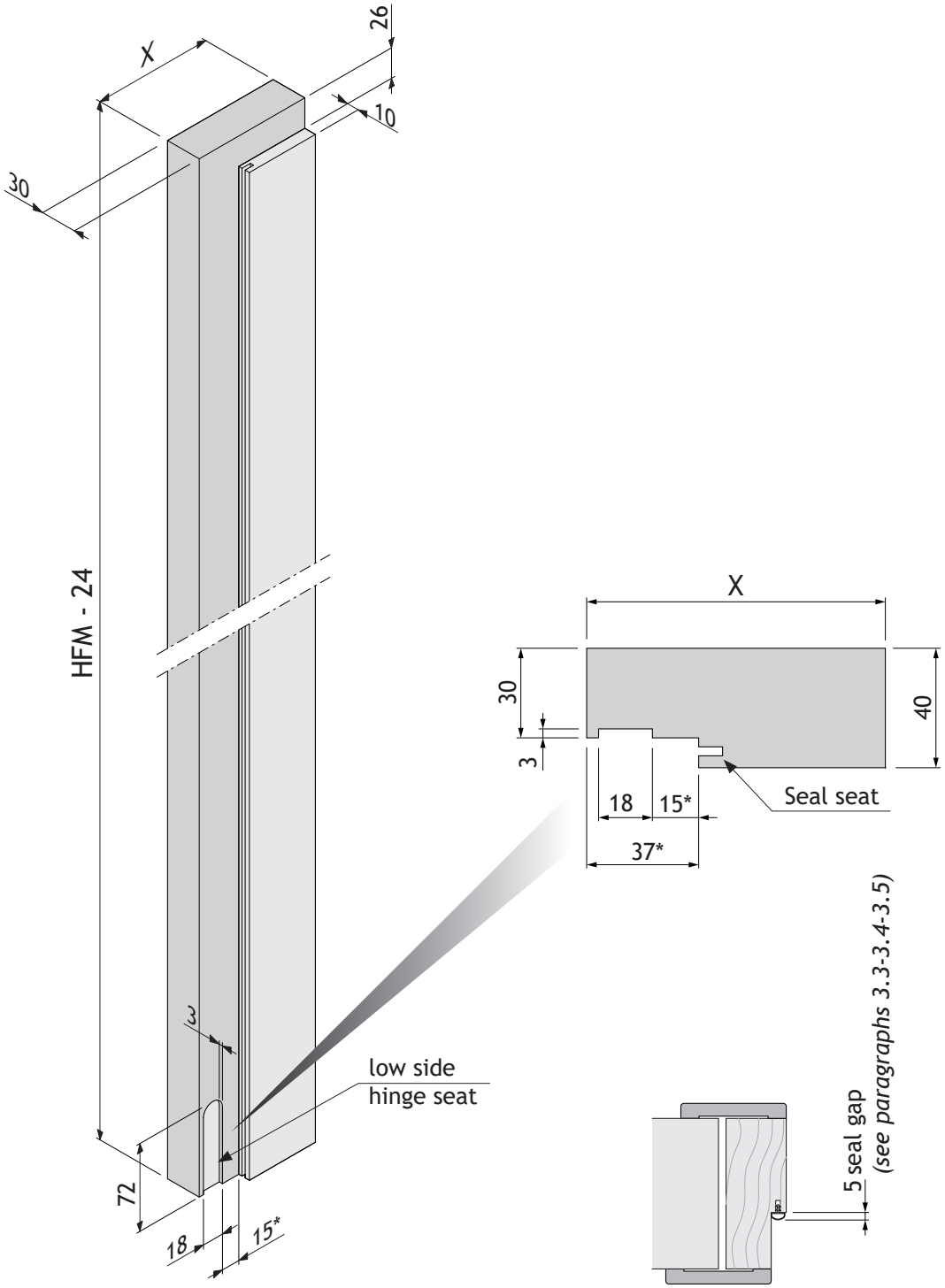

The dimension marked with (*) vary according to the seal gap dimensions

X = Wall Thickness

HFM = Wall Hole Height

5.8 Handle side door jamb (compatible with COMPACK LIVING 180°)

Door left jamb handle side *(Right jamb is symmetric)*

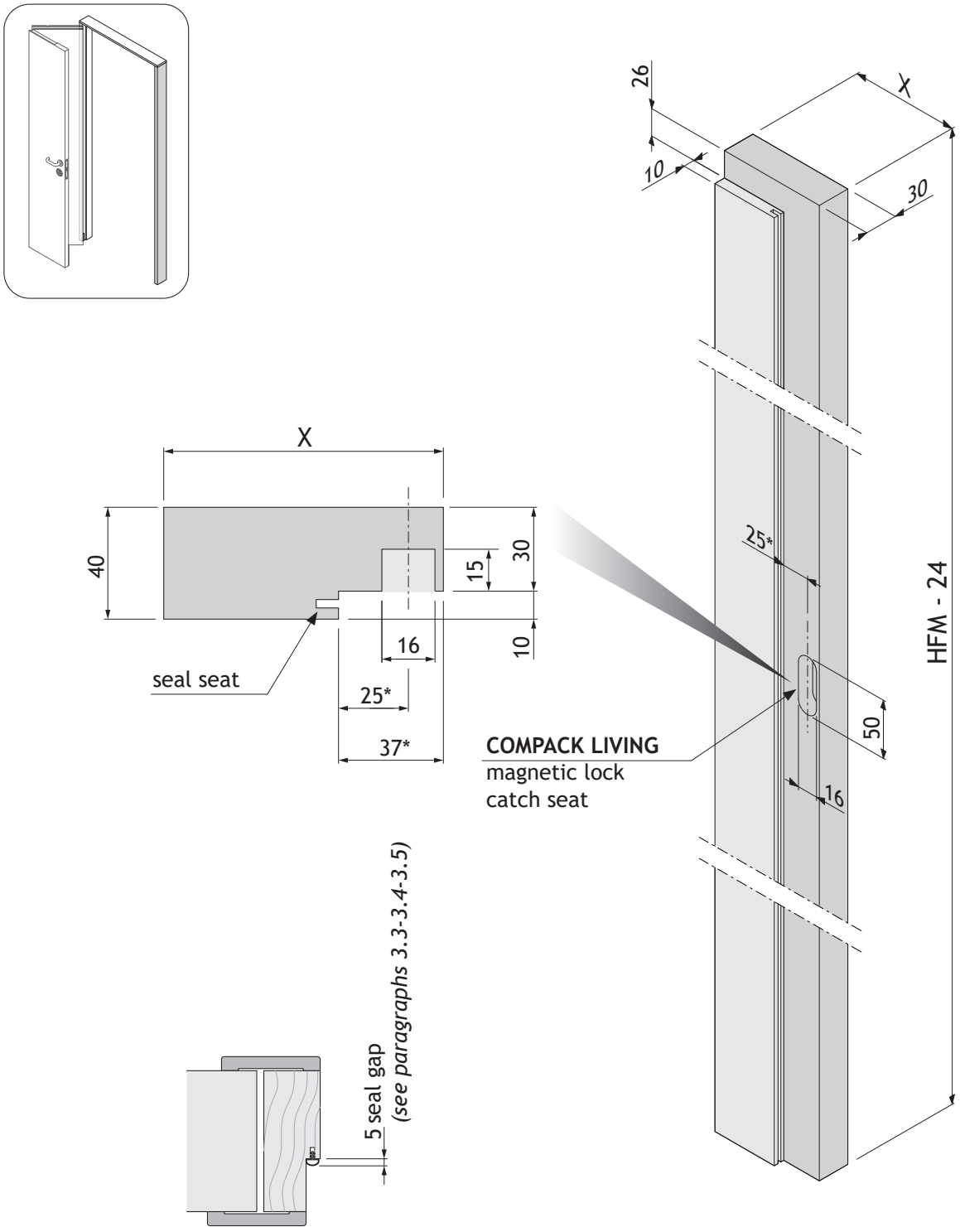

The dimension marked with (*) vary according to the seal gap dimensions.

X = Wall Thickness
HFM = Wall Hole Height

5.9 Upper crossbeam without rabbet profile (compatible with COMPACK LIVING 180°)

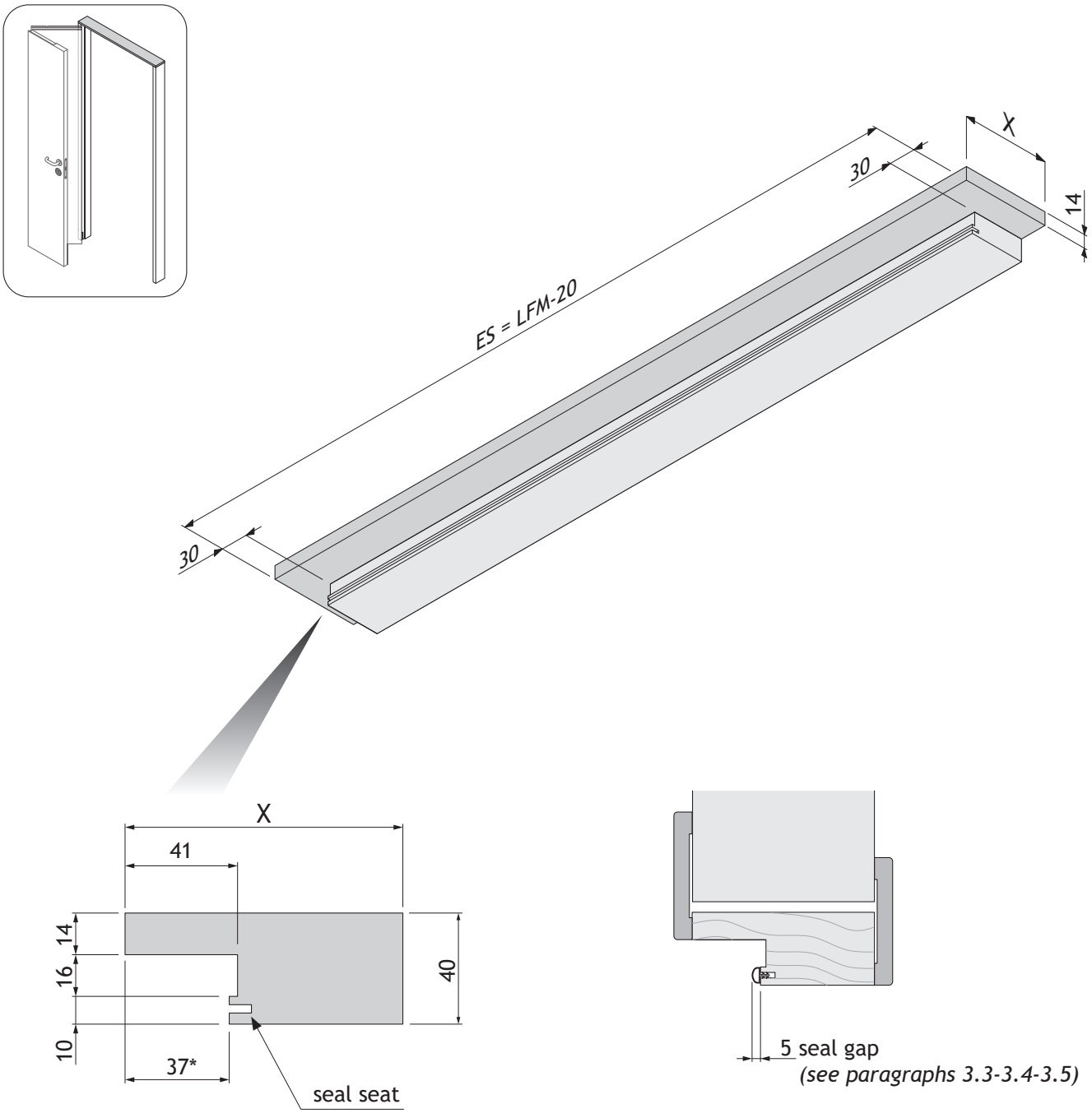

The dimension marked with (*) vary according to the seal gap dimensions.

X = Wall Thickness
ES = Outer Jamb (= length of the upper crossbeam)
LFM = Wall Hole Width

5.10 Working for the silicone gasket (compatible with COMPACK LIVING 180°)

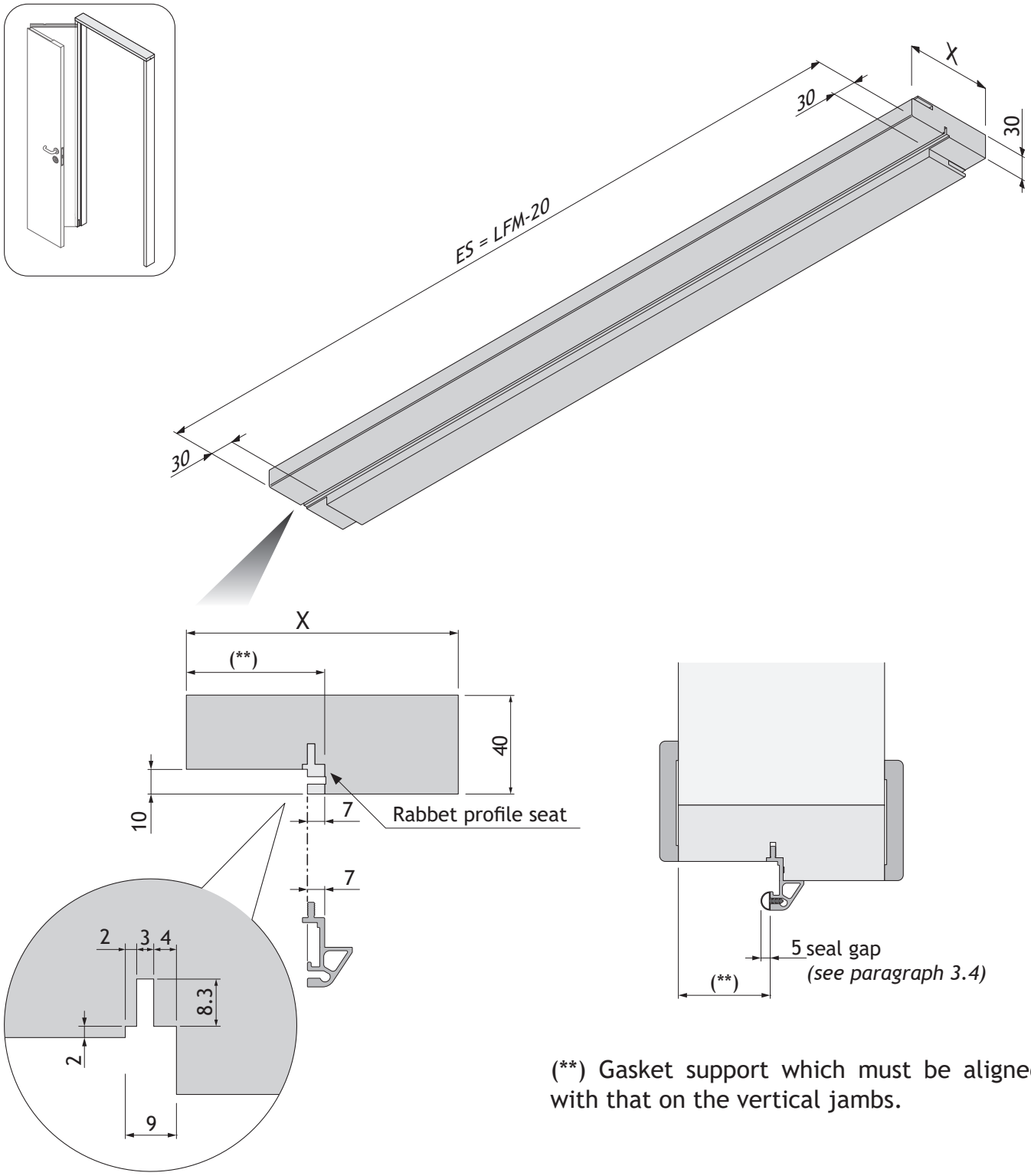

(**) Gasket support which must be aligned with that on the vertical jambs.

X = Wall Thickness
ES = Outer Jamb (= length of the upper crossbeam)
LFM = Wall Hole Width

5.11 Working for the silicone gasket (compatible with COMPACK LIVING 180°)

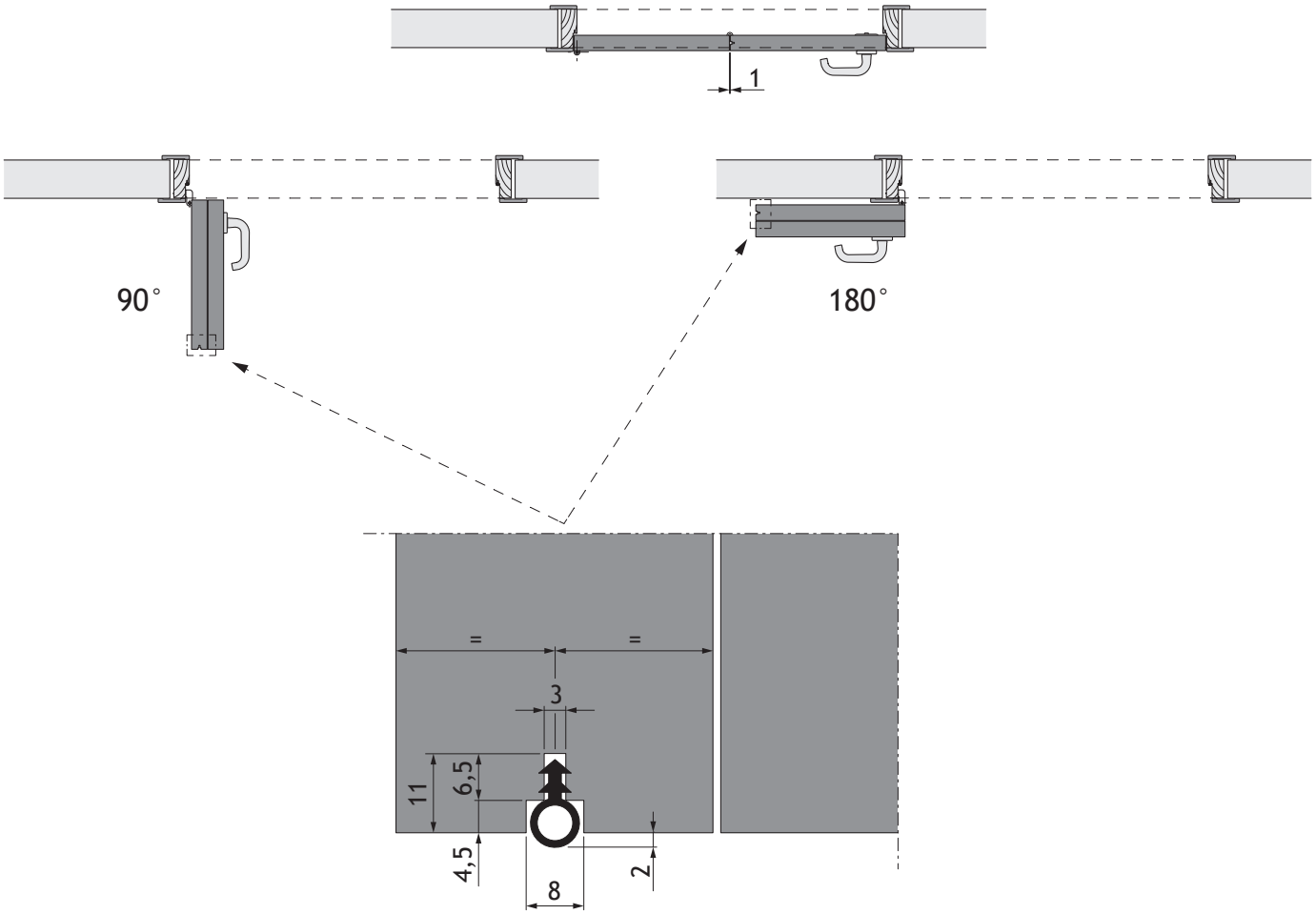

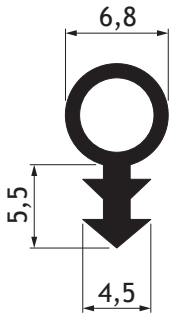

Item code gasket
Roverplastik A 109 S 68
(Optional)

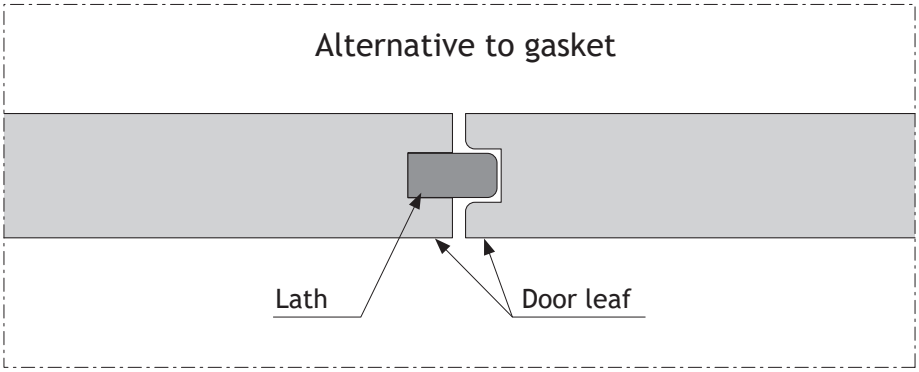

6. ASSEMBLY

6.1 Assembling the hardware on the leaf

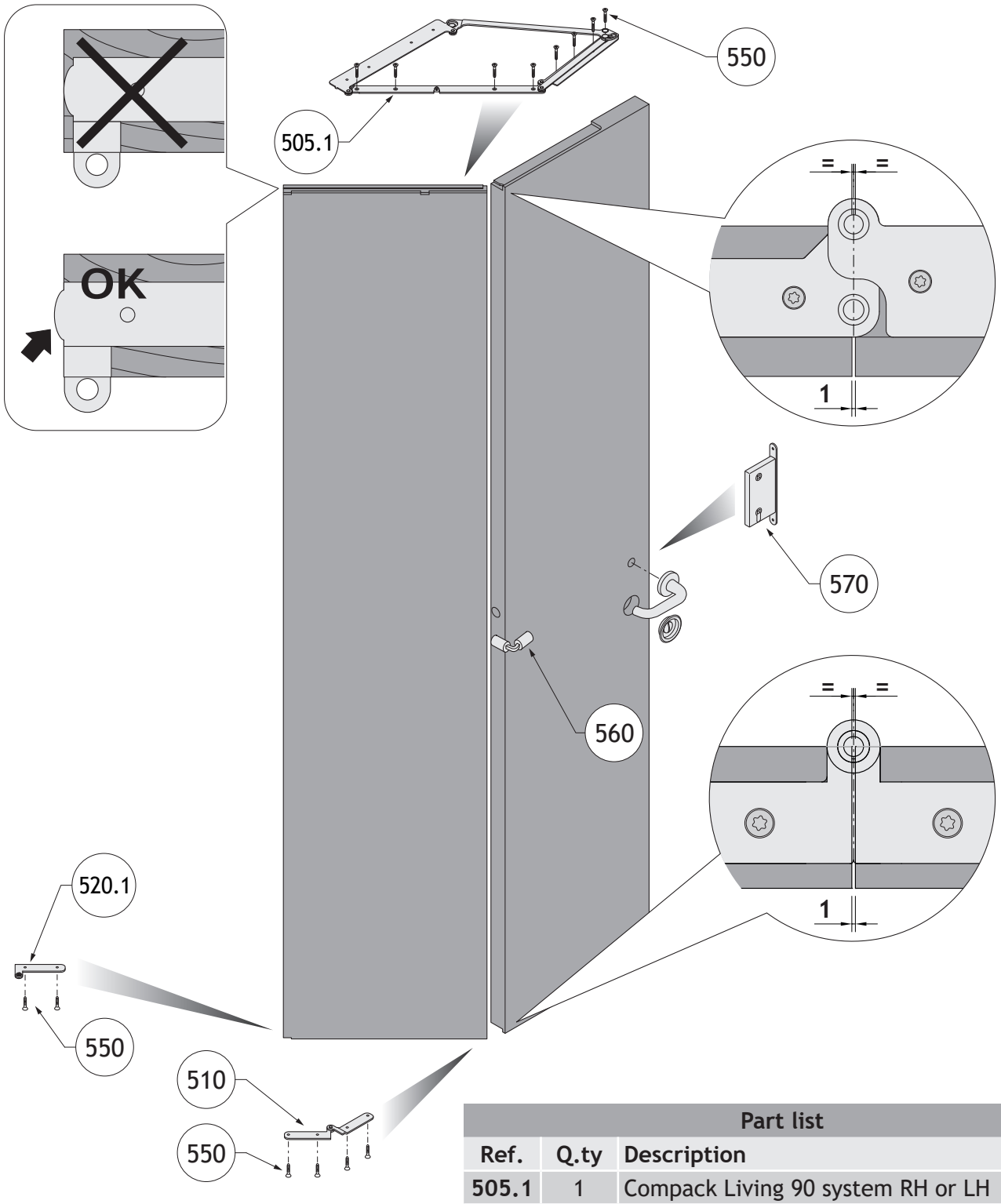

Part list		
Ref.	**Q.ty**	**Description**
505.1	1	Compack Living 90 system RH or LH
510	1	Central hinge lower
520.1	1	Lateral hinge lower for leaf RH or LH
550	14	Screw TSP trx ø 4x30
560	1	Invisible hinge for alignment leaf
570	1	Magnetic lock Compack Living with strikers and special square spindle

6.2 Assembling the hardware on the jamb

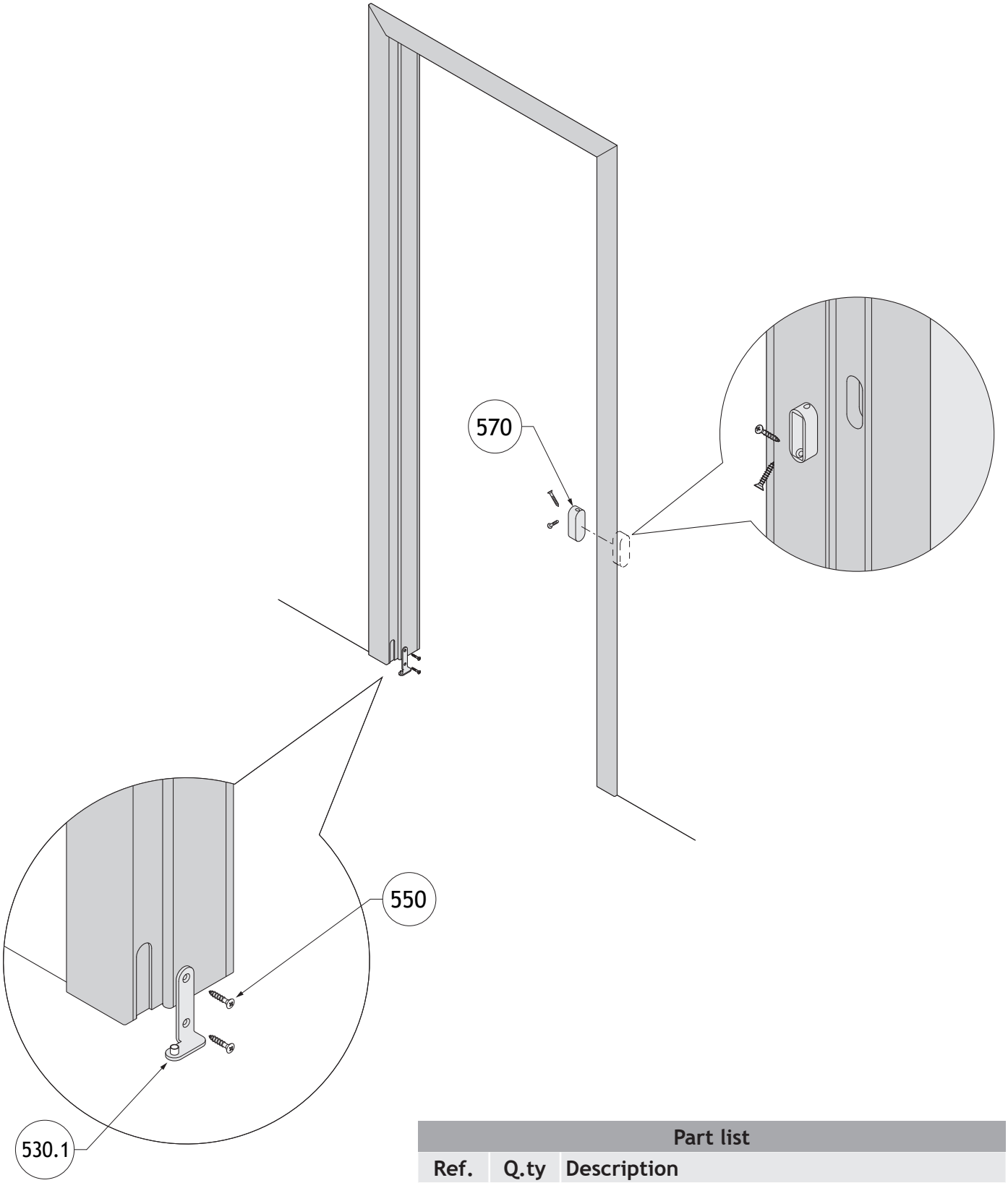

Part list		
Ref.	**Q.ty**	**Description**
530.1	1	Lateral hinge lower for jamb RH or LH
550	2	Screw TSP trx ø 4x30
570	1	Magnetic lock Compack Living with strikers (optional)

6.3 Installation door leaf on the jambs

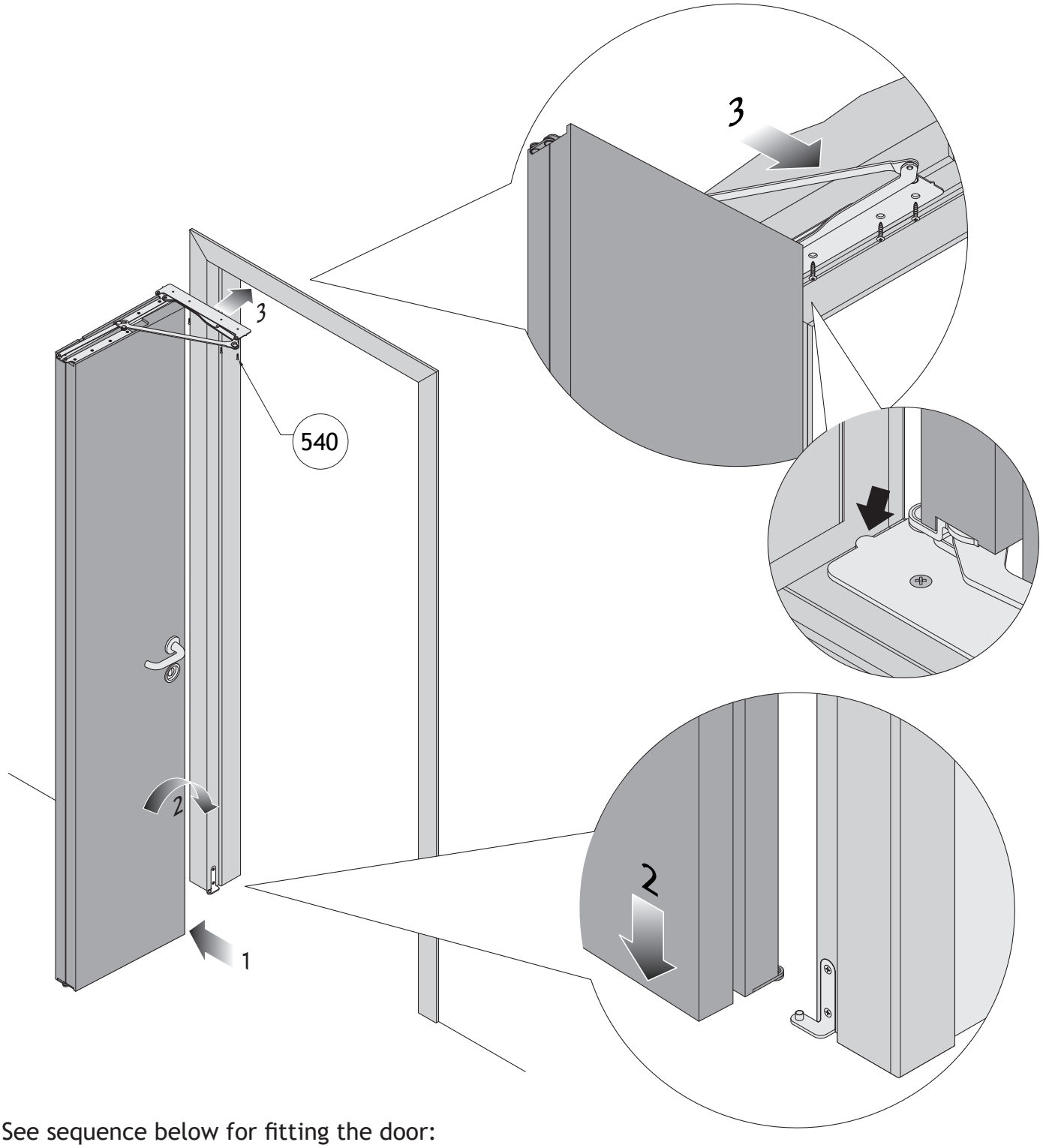

See sequence below for fitting the door:

1 fold the door leaves aganist one another

2 mount the door on the pivot of the hinge lower

3 position the top hardware pieces **in perfect alignment with the corner** and screw in place (screws included)

Part list		
Ref.	**Q.ty**	**Description**
540	4	Screw TSP trx ø 4x22

7. SPECIAL COMPACK LIVING MAGNETIC LATCH

If lever handles cannot be used because of the way the doors fold together, it is necessary to use the special **COMPACK** magnetic latch, which makes it possible to use a recessed handle on the lower section of the latch mechanism to lock the door or to retract the latch. This system provides 180° rotation. The special **COMPACK** magnetic latch also makes it possible to install the recessed handle on the upper section of the latch, to ensure privacy when the door opens into the room.

With the **COMPACK** hinge, the recessed handle installed on the lower section of the latch functions as follows:

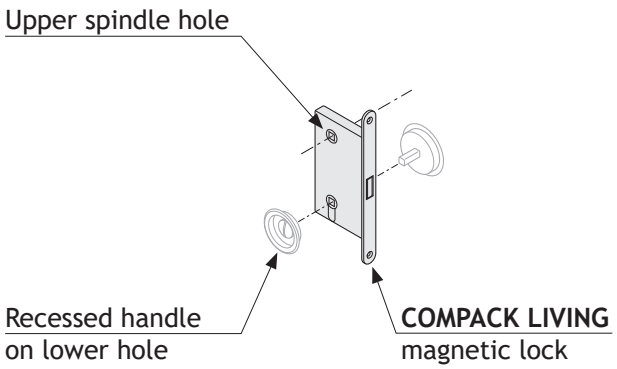

0° door locked the lever handle does not open the door

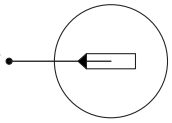

90° door unlocked the lever handle opens the door

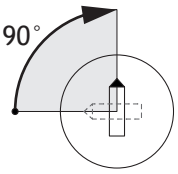

180° the recessed handle retract the lacth and opens the door

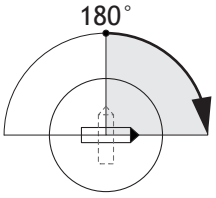

Recessed handle on upper latch section,
to ensure privacy when the door opens into the room.

To unite the lever handle with the recessed handle, use the special spindle in the latch pack

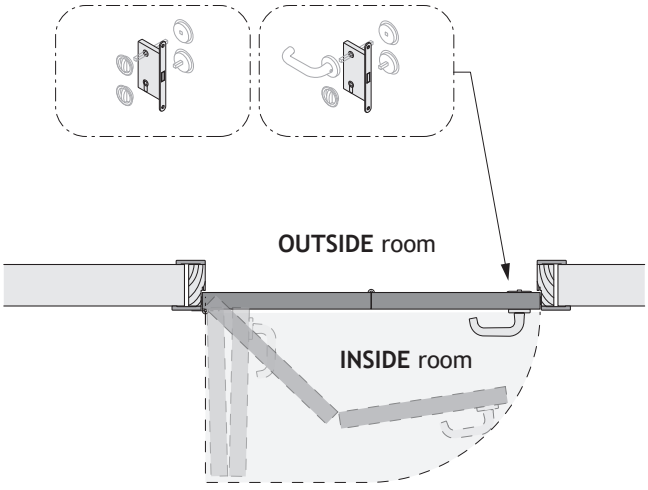

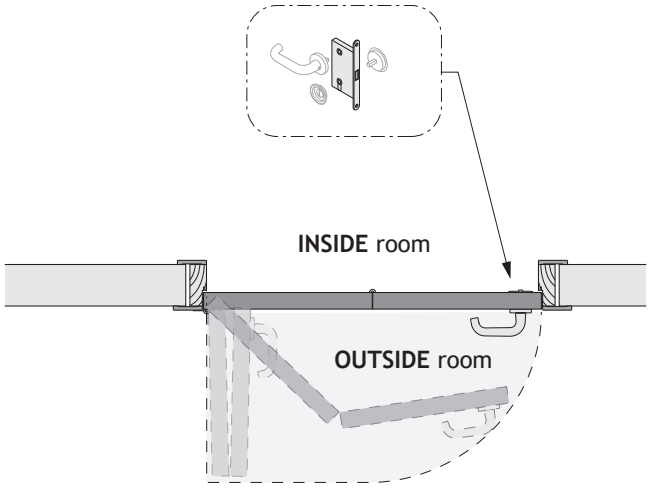

7.1 Examples for using the special COMPACK LIVING lock

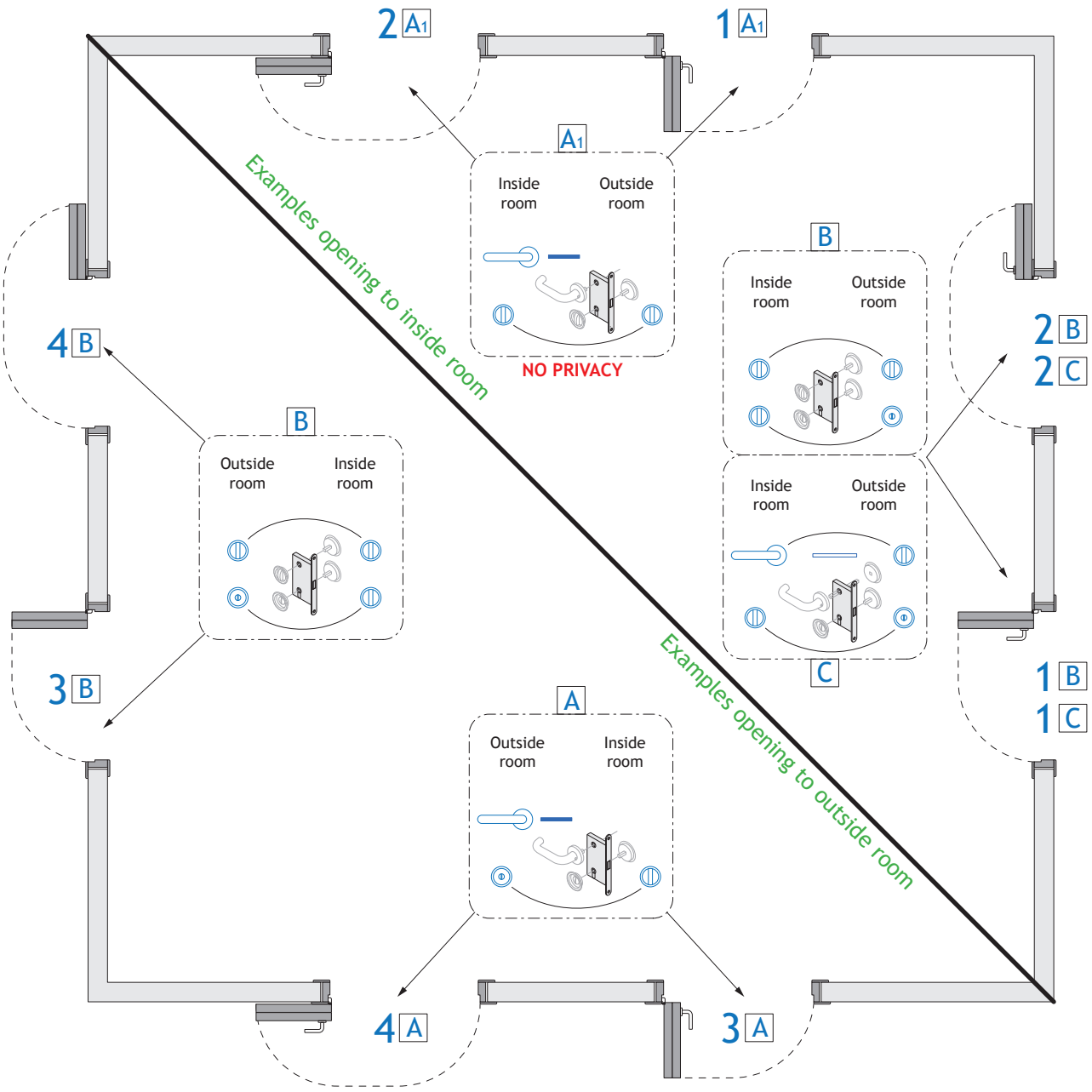

- Traditional lever handle
- Recessed handle with knob
- Recessed handle
- Special spindle square lock **COMPACK** (included in the lock's package)
- Expansion spindle square (available on the market)

1 COMPACK LIVING 90° System opening to inside room

2 COMPACK LIVING 180° System opening to inside room

3 COMPACK LIVING 90° System opening to outside room

4 COMPACK LIVING 180° System opening to outside room

NOTES

NOTES

Composizione grafica: *Studio Gallo Design srl* - Camposampiero (PD)

CELEGON
SMART OPENING SYSTEMS

COMPACK living® is an idea **CELEGON**
30035 Mirano (Venezia) | Via G. Galilei, 6 - Z.I.
T +39 041 572 8404 | F +39 041 572 8522
www.celegon.it | info@celegon.it